GX120T1(QHB1)	E-11 RECOIL STARTER (1)

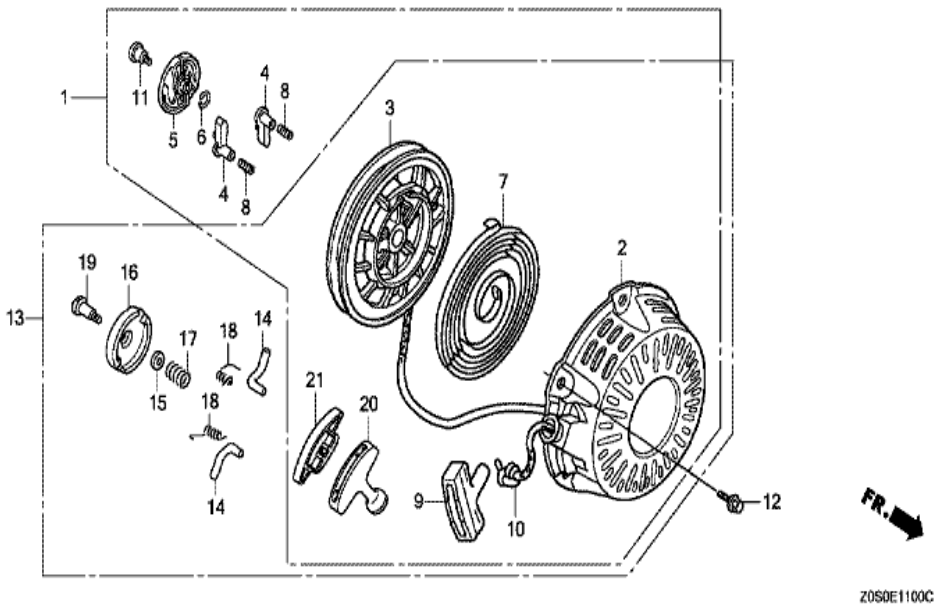

Ref	Partnumber	Description	GX120T1	Serial Numbers
002	28410-ZH8-003YA	CASE COMP., RECOIL STARTER *R280 *	1	
002	28410-ZH8-003YA	CASE COMP., RECOIL STARTER *R280 *	1	
002	28410-ZH8-003YA	CASE COMP., RECOIL STARTER *R280 *	1	
003	28421-ZH8-801	REEL, RECOIL STARTER (BLACK)	1	
003	28421-ZH8-801	REEL, RECOIL STARTER (BLACK)	1	
007	28442-ZH8-003	SPRING, RECOIL STARTER	1	
009	28461-ZH8-013	KNOB, RECOIL STARTER	1	
009	28461-ZH8-013	KNOB, RECOIL STARTER	1	
010	28462-ZH8-003	ROPE, RECOIL STARTER	1	
012	90008-ZE2-003	BOLT, FLANGE, 6X10	3	
013	28400-ZH8-033YA	STARTER ASSY., RECOIL *R280*	1	
013	28400-ZH8-033YA	STARTER ASSY., RECOIL *R280*	1	
013	28400-ZH8-033YA	STARTER ASSY., RECOIL *R280*	1	
Ref	Partnumber	Description	GX120T1	Serial Numbers
013	28400-ZH8-033YA	STARTER ASSY., RECOIL *R280*	1	
013	28400-ZH8-033YA	STARTER ASSY., RECOIL *R280*	1	

013	28400-ZH8-033YA	STARTER ASSY., RECOIL *R280*	1	
014	28422-ZH8-801	RATCHET, STARTER	2	
014	28422-ZH8-801	RATCHET, STARTER	2	1154037
015	28431-ZH8-801	PLATE, FRICTION	1	
016	28433-ZH8-801	GUIDE, RATCHET	1	
016	28433-ZH8-801	GUIDE, RATCHET	1	1154037
017	28441-ZH8-801	SPRING, FRICTION	1	
018	28443-ZH8-801	SPRING, RETURN	2	
018	28443-ZH8-801	SPRING, RETURN	2	1154037
019	90003-ZH8-801	SCREW, SETTING	1	
019	90003-ZH8-801	SCREW, SETTING	1	1154037

GX120T1(QHB1)	E-12 FAN COVER

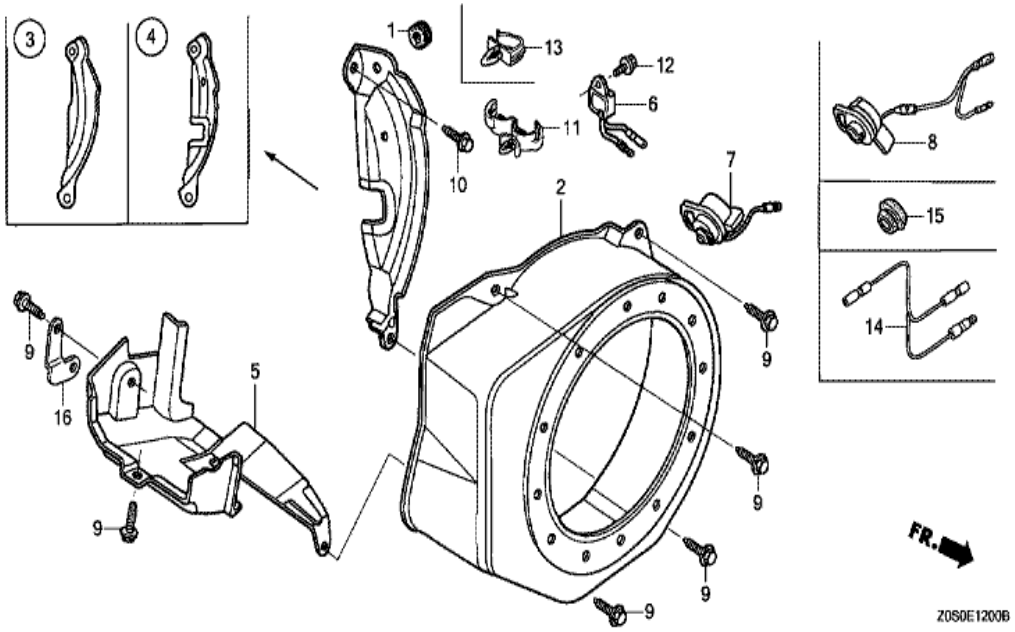

Ref	Partnumber	Description	GX120T1	Serial Numbers
001	11347-371-300	GROMMET, ADJUSTING COVER	1	
002	19610-ZE0-000ZS	COVER COMP., FAN *R280 *	1	
002	19610-ZE0-000ZS	COVER COMP., FAN *R280 *	1	
002	19610-ZE0-000ZS	COVER COMP., FAN *R280 *	1	
003	19612-ZH7-000	PLATE, SIDE (STD.)	1	
003	19612-ZH7-000	PLATE, SIDE (STD.)	1	
005	19630-ZH7-000	SHROUD COMP.	1	
009	90013-883-000	BOLT, FLANGE, 6X12 (CT200)	4	
009	90013-883-000	BOLT, FLANGE, 6X12 (CT200)	6	
010	90022-888-010	BOLT, FLANGE, 6X20 (CT200)	1	
015	81329-567-020	GROMMET, DRAIN HOLE	1	

GX120T1(QHB1)	E-14-1 CARBURETOR (2)

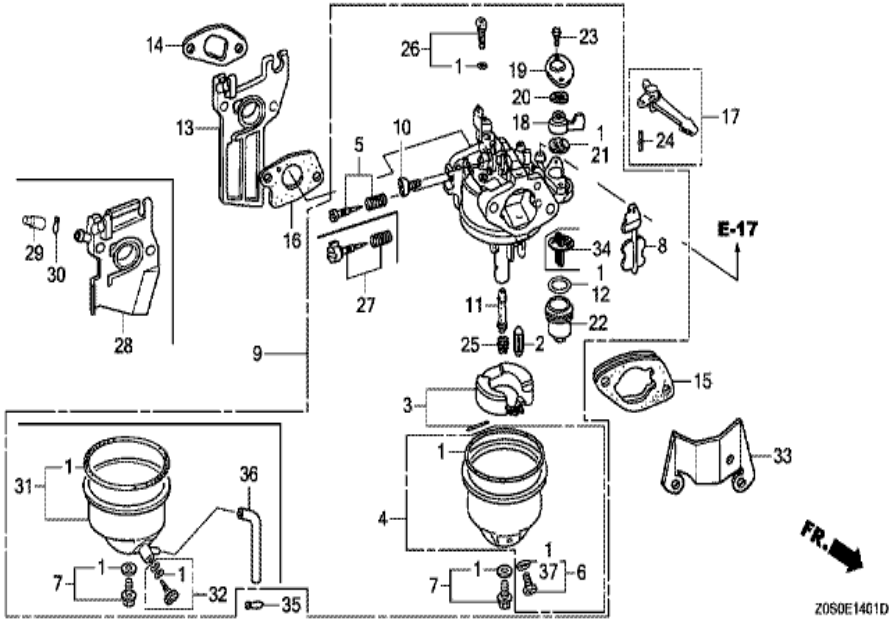

Ref	Partnumber	Description	GX120T1	Serial Numbers
001	16010-ZE1-812	GASKET SET	1	
002	16011-ZE0-005	VALVE SET, FLOAT	1	
003	16013-Z0S-B01	FLOAT SET	1	
004	16015-ZE0-831	CHAMBER SET, FLOAT	1	
004	16015-ZE0-831	CHAMBER SET, FLOAT	1	
006	16024-ZE1-811	SCREW SET, DRAIN	1	
006	16024-ZE1-811	SCREW SET, DRAIN	1	
007	16028-ZE0-005	SCREW SET	1	
007	16028-ZE0-005	SCREW SET	1	
008	16044-ZE0-005	CHOKE SET	1	
009	16100-Z0S-911	CARBURETOR ASSY. (BE60Q A)	1	1316502
009	16100-Z0S-911	CARBURETOR ASSY. (BE60Q A)	1	
009	16100-Z0S-911	CARBURETOR ASSY. (BE60Q A)	1	
Ref	Partnumber	Description	GX120T1	Serial Numbers
010	16124-ZE0-005	SCREW, THROTTLE STOP	1	
011	16166-ZH7-W50	NOZZLE, MAIN	1	

011	16166-ZH7-W50	NOZZLE, MAIN	1
011	16166-ZH7-W50	NOZZLE, MAIN	1
012	16173-001-004	PACKING, FUEL STRAINER CUP	1
013	16211-ZE0-000	INSULATOR, CARBURETOR	1
014	16212-ZH7-800	PACKING, INSULATOR	1
015	16220-ZE1-020	SPACER COMP., CARBURETOR	1
015	16220-ZE1-020	SPACER COMP., CARBURETOR	1
016	16221-ZH8-801	PACKING, CARBURETOR	1
017	16610-ZE1-000	LEVER COMP., CHOKE (STD.)	1
018	16953-ZE1-812	LEVER, COCK	1
019	16954-ZE1-812	PLATE, LEVER SETTING	1
020	16956-ZE1-811	SPRING, COCK LEVER	1
021	16957-ZE1-812	PACKING, FUEL COCK	1
022	16967-ZE0-811	CUP, FUEL STRAINER	1
023	93500-030061H	SCREW, PAN, 3X6	2
024	94305-20122	PIN, SPRING, 2X12	1
025	99101-ZH80580	JET, MAIN, #58	(1)
025	99101-ZH80580	JET, MAIN, #58	(1)
025	99101-ZH80580	JET, MAIN, #58	(1)
025	99101-ZH80600	JET, MAIN, #60	(1)
025	99101-ZH80600	JET, MAIN, #60	(1)
025	99101-ZH80600	JET, MAIN, #60	(1)
025	99101-ZH80620	JET, MAIN, #62	1
025	99101-ZH80620	JET, MAIN, #62	1
025	99101-ZH80620	JET, MAIN, #62	1
026	99204-ZE00350	JET SET, PILOT, #35	1
027	16016-ZH7-W01	SCREW SET, PILOT	1
037	16141-Z0S-003	WASHER, PLAIN (6.2X10.7 DRAIN)	(1)

GX120T1(QHB1)	E-15-2 AIR CLEANER (OIL BATH)

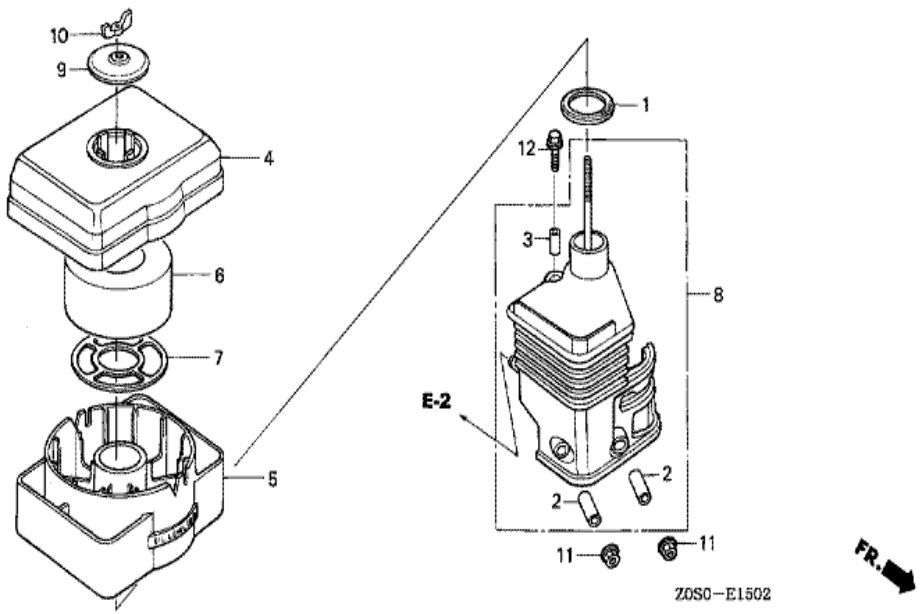

Ref	Partnumber	Description	GX120T1	Serial Numbers
001	16271-ZE1-000	PACKING, ELBOW	1	
002	17238-ZE0-010	COLLAR, AIR CLEANER	2	
003	17239-ZE1-000	COLLAR B, AIR CLEANER	1	
004	17401-ZE1-810	BODY, CLEANER (OIL BATH)	1	
005	17402-ZE1-810	PAN, CLEANER OIL (OIL BATH)	1	
006	17403-ZE1-810	ELEMENT, AIR CLEANER (OIL BATH)	1	
007	17404-841-000	GRID, AIR CLEANER	1	
007	17404-841-000	GRID, AIR CLEANER	1	
008	17410-ZE0-811	ELBOW COMP., AIR CLEANER	1	
009	17421-ZE1-000	CAP, CLEANER	1	
010	90325-044-000	NUT, TOOL BOX SETTING	1	
011	94050-06000	NUT, FLANGE, 6MM	2	
012	95701-0602000	BOLT, FLANGE, 6X20	1	

GX120T1(QHB1)	E-16 MUFFLER (STANDARD)

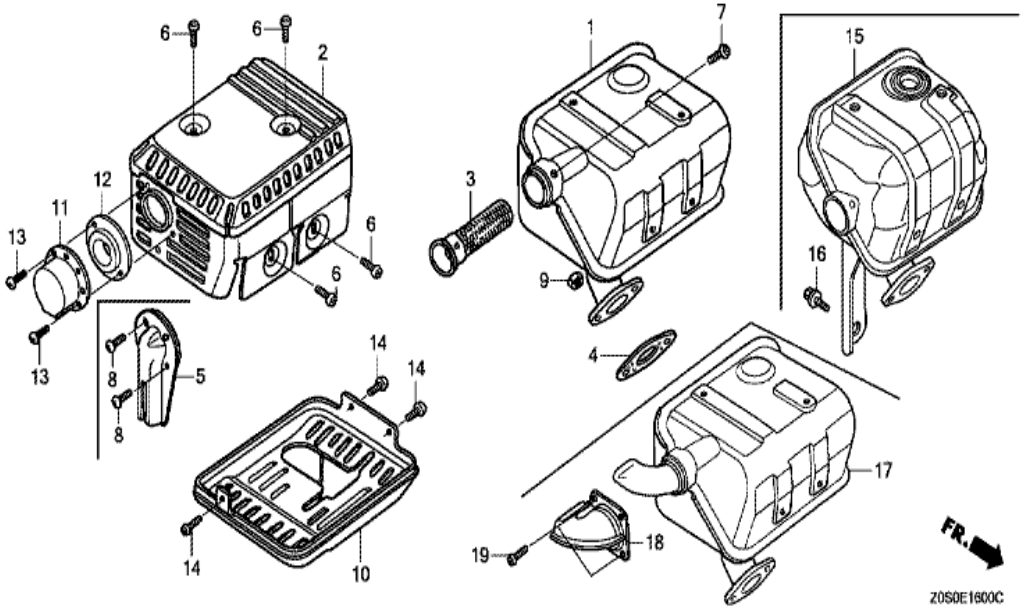

Ref	Partnumber	Description	GX120T1	Serial Numbers
001	18310-ZF1-000	MUFFLER COMP. (STD.)	1	
001	18310-ZF1-000	MUFFLER COMP. (STD.)	1	
001	18310-ZF1-000	MUFFLER COMP. (STD.)	1	
001	18310-ZF1-000	MUFFLER COMP. (STD.)	1	
001	18310-ZH8-810	MUFFLER COMP. (ARRESTER)	(1)	
001	18310-ZH8-810	MUFFLER COMP. (ARRESTER)	(1)	
001	18310-ZH8-810	MUFFLER COMP. (ARRESTER)	1	
001	18310-ZH8-810	MUFFLER COMP. (ARRESTER)	1	
001	18310-ZH8-810	MUFFLER COMP. (ARRESTER)	(1)	
002	18320-ZF1-H02	PROTECTOR, MUFFLER (STD.) (BLACK)	1	
002	18320-ZF1-H02	PROTECTOR, MUFFLER (STD.) (BLACK)	1	
002	18320-ZF1-H02	PROTECTOR, MUFFLER (STD.) (BLACK)	1	
003	18355-ZE1-000	ARRESTER, SPARK	1	
Ref	Partnumber	Description	GX120T1	Serial Numbers
003	18355-ZE1-000	ARRESTER, SPARK	(1)	
004	18381-Z0T-801	GASKET, MUFFLER	1	

004	18381-Z0T-801	GASKET, MUFFLER	1	1568330
006	90050-ZE1-000	SCREW, TAPPING, 5X8	4	
007	90055-ZE1-000	SCREW, TAPPING, 4X6	1	
007	90055-ZE1-000	SCREW, TAPPING, 4X6	(1)	
009	94001-080000S	NUT, HEX., 8MM	2	

GX120T1(QHB1)	E-17 FUEL TANK

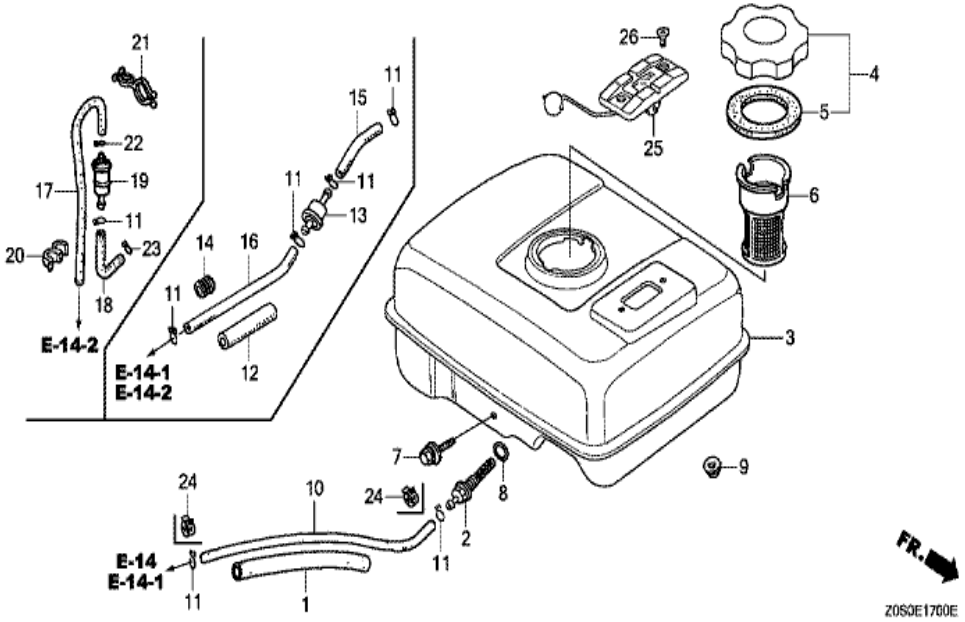

Ref	Partnumber	Description	GX120T1	Serial Numbers
001	16854-ZH8-000	RUBBER, SUPPORTER (107MM)	1	
002	16955-ZE1-000	JOINT, FUEL TANK	1	
002	16955-ZE1-010	JOINT, FUEL TANK	1	
003	17510-Z0S-010ZB	TANK COMP., FUEL *NH31 *	1	1823093
003	17510-Z0S-010ZB	TANK COMP., FUEL *NH31 *	1	
004	17620-Z0T-813	CAP COMP., FUEL FILLER (CHROME PLATED) (	1	
004	17620-Z0T-813	CAP COMP., FUEL FILLER (CHROME PLATED) (	1	
005	17631-Z0T-801	PACKING, FUEL FILLER CAP (39X62X3) (RADI	1	
007	90004-ZH7-003	BOLT, FLANGE, 6X29	1	
008	91353-671-004	O-RING, 14MM (NOK)	1	
009	94050-06000	NUT, FLANGE, 6MM	2	
010	91424-Z4F-802	TUBE, FUEL, 4.5X140 (FKM)	1	
010	91424-Z4F-802	TUBE, FUEL, 4.5X140 (FKM)	1	
Ref	Partnumber	Description	GX120T1	Serial Numbers
024	95002-4080008	CLAMP, TUBE (D8)	2	

GX120T1(QHB1)	E-19 FLYWHEEL

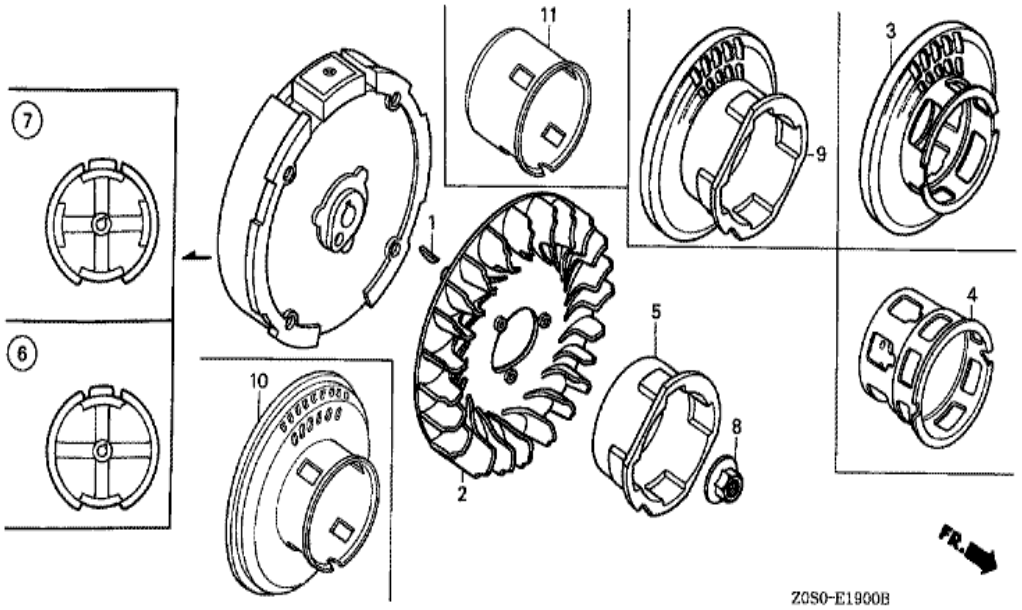

Ref	Partnumber	Description	GX120T1	Serial Numbers
001	13331-357-000	KEY, SPECIAL WOODRUFF, 25X18	1	
002	19511-ZE0-000	FAN, COOLING	1	
006	31100-ZE0-020	FLYWHEEL COMP.	1	1659243
006	31100-ZE0-020	FLYWHEEL COMP.	1	
008	90201-Z0T-800	NUT, SPECIAL, 14MM	1	
010	28450-ZH7-801	PULLEY COMP., STARTER	1	

GX120T1(QHB1)	E-2 CYLINDER HEAD

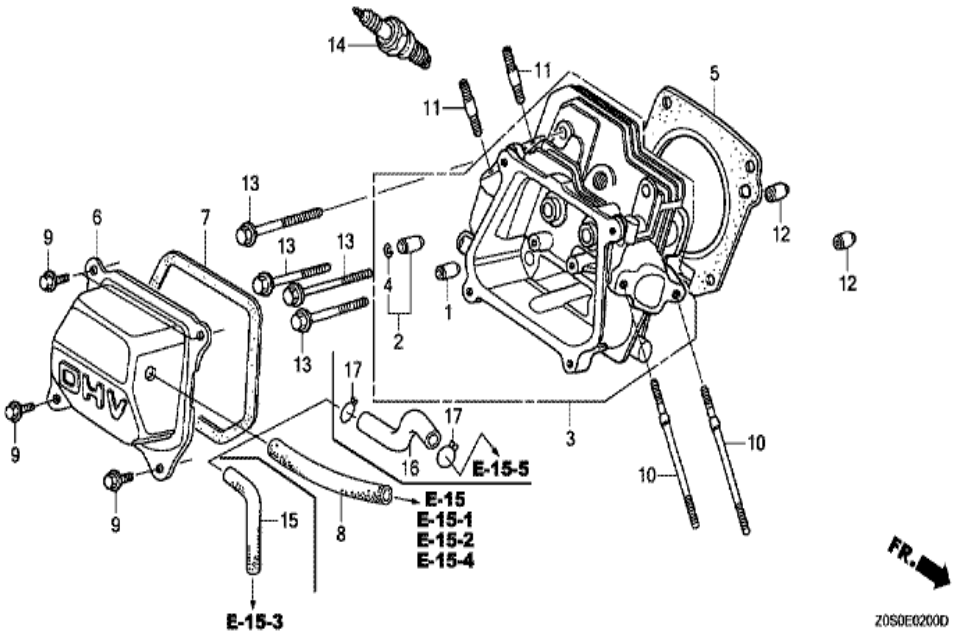

Ref	Partnumber	Description	GX120T1	Serial Numbers
001	12204-ZE1-306	GUIDE, IN. VALVE (OS)	1	
002	12205-ZE1-315	GUIDE, EX. VALVE (OS)	1	
003	12210-ZH7-415	HEAD COMP., CYLINDER	1	
003	12210-ZH7-415	HEAD COMP., CYLINDER	1	
004	12216-ZE5-300	CLIP, VALVE GUIDE	1	
005	12251-Z0S-801	GASKET, CYLINDER HEAD (THAI LEAKLESS)	1	
005	12251-Z0S-801	GASKET, CYLINDER HEAD (THAI LEAKLESS)	1	1568330
006	12310-ZE1-020	COVER COMP., HEAD	1	
006	12310-ZE1-020	COVER COMP., HEAD	1	
006	12310-ZE1-020	COVER COMP., HEAD	1	
006	12310-ZE1-020	COVER COMP., HEAD	1	
007	12391-ZE1-000	PACKING, HEAD COVER	1	
008	15721-ZH8-000	TUBE, BREATHER	1	
Ref	Partnumber	Description	GX120T1	Serial Numbers
009	90013-883-000	BOLT, FLANGE, 6X12 (CT200)	4	
010	90043-ZE1-020	BOLT, STUD, 6X112	2	

010	90043-ZE1-020	BOLT, STUD, 6X112	2	
010	90043-ZE1-020	BOLT, STUD, 6X112	2	
011	90047-ZE1-000	BOLT, STUD, 8X32	2	
012	94301-10160	DOWEL PIN, 10X16	2	
013	95701-0805500	BOLT, FLANGE, 8X55	4	
013	95701-0805500	BOLT, FLANGE, 8X55	4	1722681
014	98079-55876	PLUG, SPARK (BPR5ES) (NGK)	(1)	
014	98079-55876	PLUG, SPARK (BPR5ES) (NGK)	(1)	
014	98079-55876	PLUG, SPARK (BPR5ES) (NGK)	(1)	
014	98079-55876	PLUG, SPARK (BPR5ES) (NGK)	(1)	
014	98079-56876	PLUG, SPARK (BPR6ES) (NGK)	1	
014	98079-56876	PLUG, SPARK (BPR6ES) (NGK)	1	
014	98079-56876	PLUG, SPARK (BPR6ES) (NGK)	1	
014	98079-56876	PLUG, SPARK (BPR6ES) (NGK)	1	

GX120T1(QHB1)	E-20 IGNITION COIL

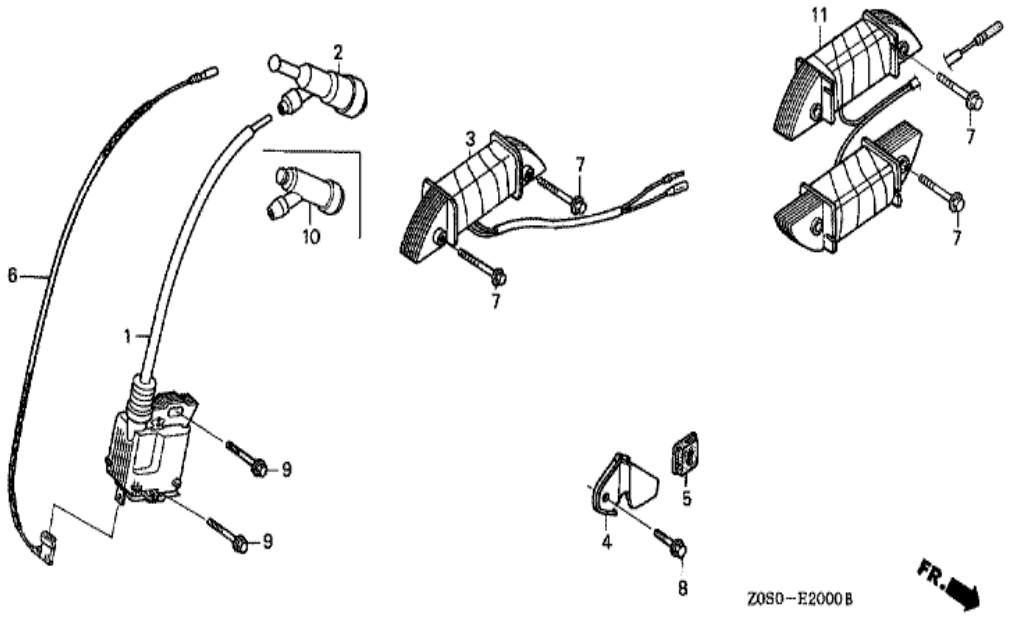

Ref	Partnumber	Description	GX120T1	Serial Numbers
001	30500-Z0T-802	COIL ASSY., IGNITION	1	
002	30700-Z0T-811	CAP ASSY., NOISE SUPPRESSOR	1	
002	30700-Z0T-811	CAP ASSY., NOISE SUPPRESSOR	1	
006	36101-ZE1-010	CORD, STOP SWITCH (370MM)	1	
009	90121-952-000	BOLT, FLANGE, 6X25 (CT200)	2	

GX120T1(QHB1)	E-22 CONTROL (1)

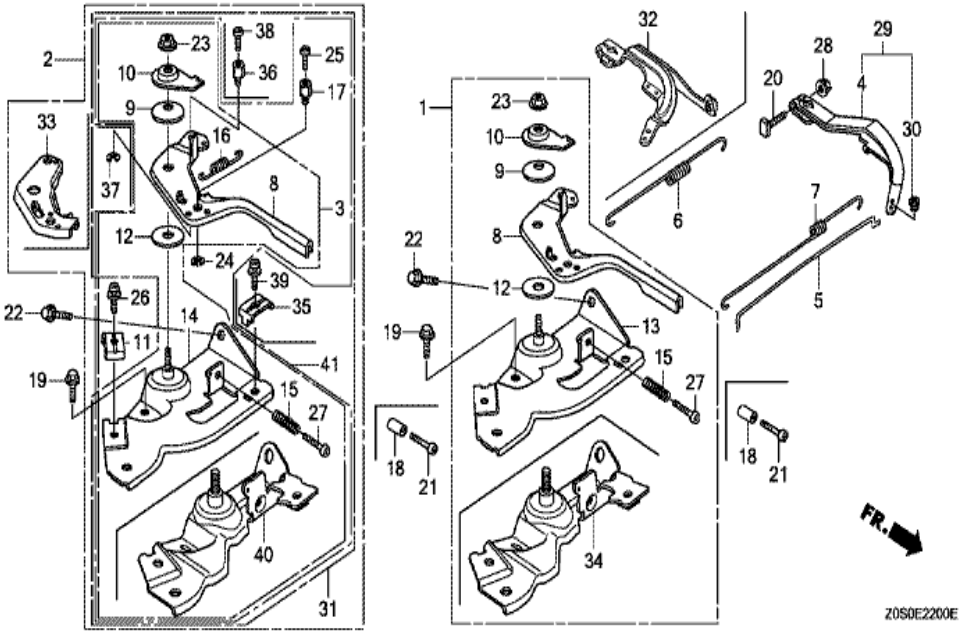

Ref	Partnumber	Description	GX120T1	Serial Numbers
004	16551-ZE0-010	ARM, GOVERNOR	1	
005	16555-ZE0-000	ROD, GOVERNOR	1	
006	16561-ZE0-020	SPRING, GOVERNOR	1	
007	16562-ZE0-020	SPRING, THROTTLE RETURN	1	
008	16571-ZH7-000	LEVER, CONTROL	1	
008	16571-ZH7-000	LEVER, CONTROL	1	
009	16574-ZE1-000	SPRING, LEVER	1	
010	16575-ZH8-000	WASHER, CONTROL LEVER	1	
011	16576-891-000	HOLDER, CABLE	1	
012	16578-ZE1-000	SPACER, CONTROL LEVER	1	
014	16580-ZH7-810	BASE COMP., CONTROL (###)	1	
015	16584-883-300	SPRING, CONTROL ADJUSTING	1	
016	16592-ZE1-810	SPRING, CABLE RETURN	1	
Ref	Partnumber	Description	GX120T1	Serial Numbers
017	16594-883-010	HOLDER, WIRE	1	
018	16599-ZG1-M10	COLLAR, STOPPER	(1)	

019	90013-883-000	BOLT, FLANGE, 6X12 (CT200)	1
020	90015-ZE5-010	BOLT, GOVERNOR ARM	1
020	90015-ZE5-010	BOLT, GOVERNOR ARM	1
021	90016-ZG9-N30	SCREW, RECESSED, 5X25	(1)
022	90022-888-010	BOLT, FLANGE, 6X20 (CT200)	1
023	90114-SA0-000	NUT, SELF-LOCK, 6MM	1
024	90605-230-000	CIRCLIP, 5MM	1
025	93500-040060H	SCREW, PAN, 4X6	1
026	93500-050160A	SCREW, PAN, 5X16	1
027	93500-050250H	SCREW, PAN, 5X25	1
028	94050-06000	NUT, FLANGE, 6MM	1
031	16500-Z0S-800	CONTROL ASSY. (REMOTE)	1
035	16576-891-000	HOLDER, CABLE	1
036	16594-883-010	HOLDER, WIRE	1
037	90605-230-000	CIRCLIP, 5MM	1
038	93500-040060H	SCREW, PAN, 4X6	1
039	93500-050160A	SCREW, PAN, 5X16	1

GX120T1(QHB1)	E-28 LABEL

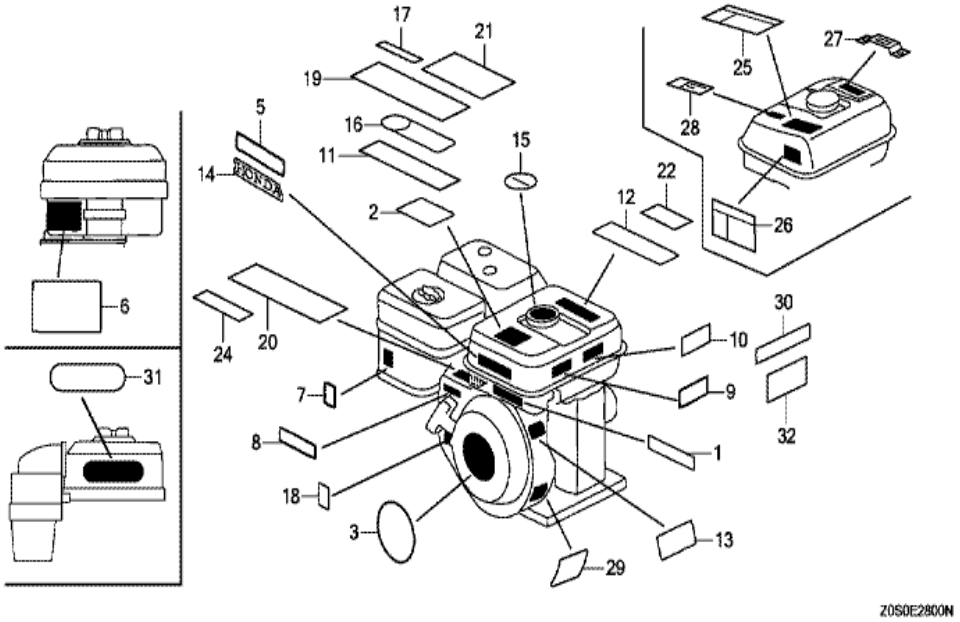

Ref	Partnumber	Description	GX120T1	Serial Numbers
003	87521-ZH7-040	EMBLEM (GX120)	1	1663871
003	87521-ZH7-040	EMBLEM (GX120)	1	
003	87521-ZH7-040	EMBLEM (GX120)	1	
007	87528-ZH7-000	MARK, CHOKE (GRAY)	1	
007	87528-ZH7-000	MARK, CHOKE (GRAY)	1	
007	87528-ZH7-000	MARK, CHOKE (GRAY)	1	
007	87528-ZH7-000	MARK, CHOKE (GRAY)	1	
008	87532-ZH7-000	MARK, THROTTLE INDICATION	1	
008	87532-ZH7-000	MARK, THROTTLE INDICATION	1	
018	87114-ZH7-840	LABEL, WARNING (NOT CERTIFIED FOR SALE)	1	
021	87519-Z4H-000	MARK, OPERATOR CAUTION (PICTOGRAPH)	1	

GX120T1(QHB1)	E-3 CYLINDER BARREL

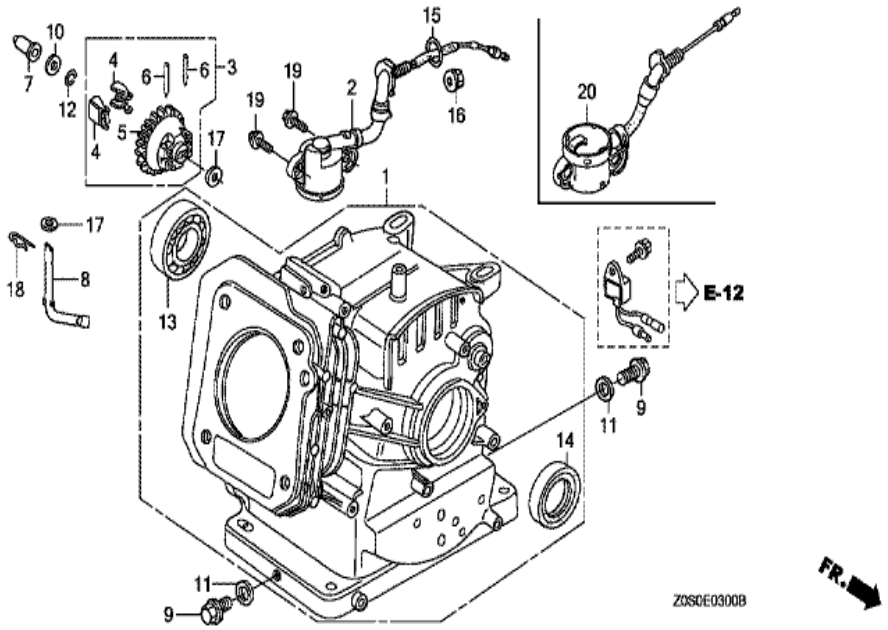

Ref	Partnumber	Description	GX120T1	Serial Numbers
001	12000-Z0S-405	BARREL ASSY., CYLINDER	1	
003	16510-ZE1-000	GOVERNOR ASSY.	1	
004	16511-ZE1-000	WEIGHT, GOVERNOR	2	
005	16512-ZE1-000	HOLDER, GOVERNOR WEIGHT	1	
006	16513-ZE1-000	PIN, GOVERNOR WEIGHT	2	
007	16531-ZE1-000	SLIDER, GOVERNOR	1	
008	16541-ZE1-000	SHAFT, GOVERNOR ARM	1	
009	90131-ZE1-000	BOLT, DRAIN PLUG	2	
010	90451-ZE1-000	WASHER, THRUST, 6MM	1	
011	90601-ZE1-000	WASHER, DRAIN PLUG, 10.2MM	2	
012	90602-ZE1-000	CLIP, GOVERNOR HOLDER	1	
013	91001-878-003	BEARING, RADIAL BALL,	1	
014	91202-ZE6-013	OIL SEAL, 22X35X6	1	
Ref	Partnumber	Description	GX120T1	Serial Numbers
014	91202-ZE6-013	OIL SEAL, 22X35X6	1	
017	94101-06800	WASHER, PLAIN, 6MM	2	

018	94251-08000	PIN, LOCK, 8MM	1

GX120T1(QHB1)	E-6 CRANKCASE COVER (1)

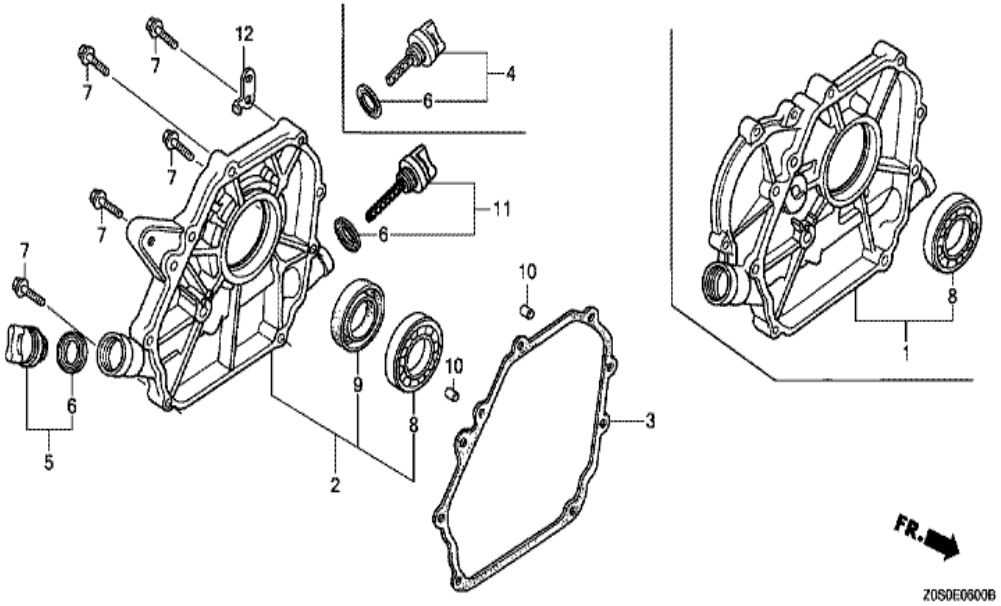

Ref	Partnumber	Description	GX120T1	Serial Numbers
002	11300-ZE0-641	COVER ASSY., CRANKCASE	1	
002	11300-ZE0-641	COVER ASSY., CRANKCASE	1	
003	11381-ZH7-800	PACKING, CASE COVER	1	
005	15600-Z0T-820	CAP ASSY., OIL FILLER	1	
005	15600-Z0T-820	CAP ASSY., OIL FILLER	1	
006	15625-Z0T-800	PACKING, OIL FILLER CAP	2	
007	90015-883-000	BOLT, FLANGE, 6X28 (CT200)	7	
008	91001-878-003	BEARING, RADIAL BALL,	1	
009	91203-ZE0-013	OIL SEAL, 22X41X6	1	
009	91203-ZE0-013	OIL SEAL, 22X41X6	1	
010	94301-08140	DOWEL PIN, 8X14	2	
011	15600-Z0T-810	CAP ASSY., OIL FILLER	1	

GX120T1(QHB1)	E-7 CRANKSHAFT

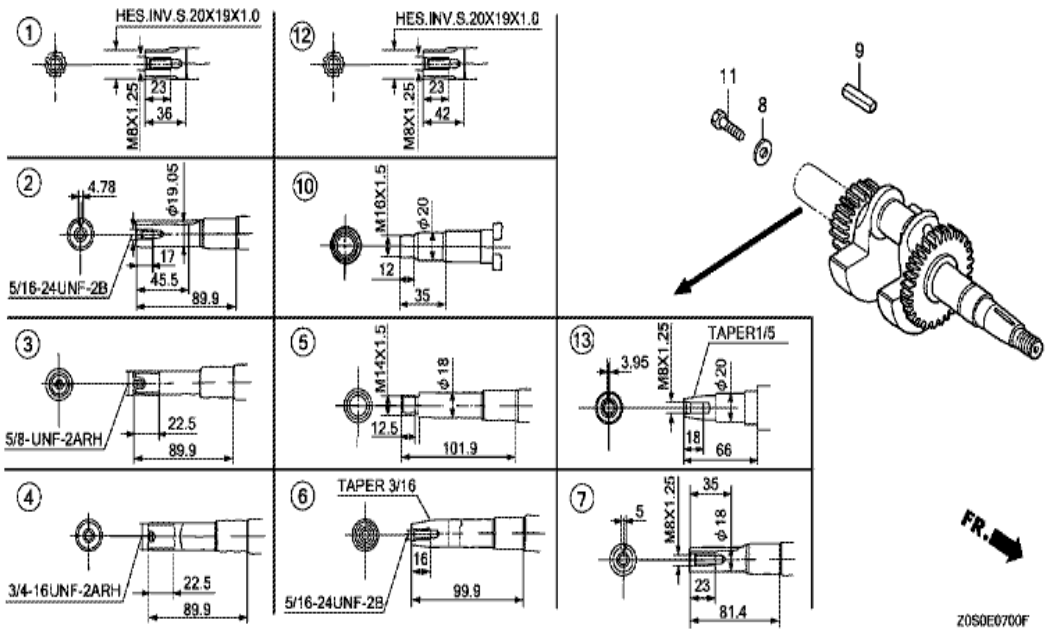

Ref	Partnumber	Description	GX120T1	Serial Numbers
002	13310-Z0S-800	CRANKSHAFT COMP.	1	

GX120T1(QHB1)	E-8 PISTON

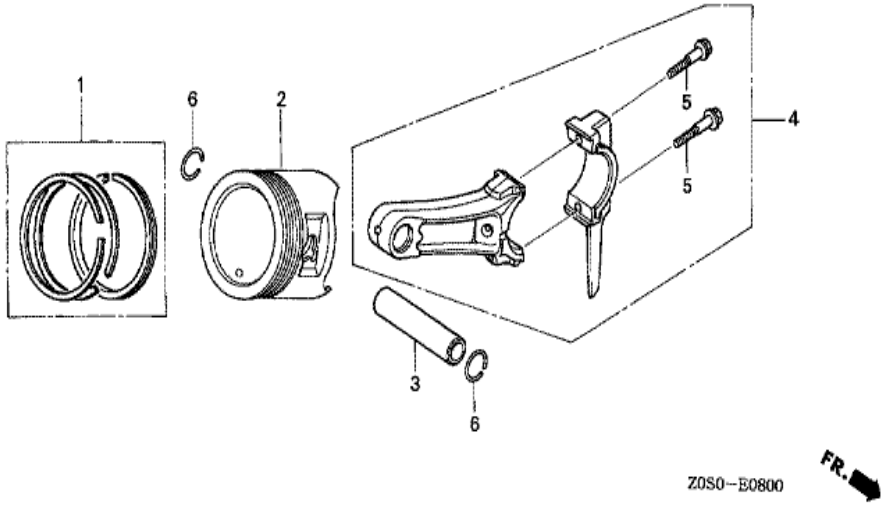

Ref	Partnumber	Description	GX120T1	Serial Numbers
001	13010-Z4F-004	RING SET, PISTON (STD.) (TEIKOKU)	1	1659243
001	13010-Z4F-004	RING SET, PISTON (STD.) (TEIKOKU)	1	
001	13010-Z4H-003	RING SET, PISTON (STD.) (RIKEN)	1	1659243
001	13010-Z4H-003	RING SET, PISTON (STD.) (RIKEN)	1	
001	13011-Z4F-004	RING SET, PISTON (0.25) (TEIKOKU)	(1)	1659243
001	13011-Z4F-004	RING SET, PISTON (0.25) (TEIKOKU)	(1)	
001	13011-Z4H-003	RING SET, PISTON (0.25) (RIKEN)	(1)	1656935
001	13011-Z4H-003	RING SET, PISTON (0.25) (RIKEN)	(1)	
001	13012-Z4F-004	RING SET, PISTON (0.50) (TEIKOKU)	(1)	1659243
001	13012-Z4F-004	RING SET, PISTON (0.50) (TEIKOKU)	(1)	
001	13012-Z4H-003	RING SET, PISTON (0.50) (RIKEN)	(1)	1659243
001	13012-Z4H-003	RING SET, PISTON (0.50) (RIKEN)	(1)	
001	13013-Z4F-004	RING SET, PISTON (0.75) (TEIKOKU)	(1)	1659243
Ref	Partnumber	Description	GX120T1	Serial Numbers
001	13013-Z4F-004	RING SET, PISTON (0.75) (TEIKOKU)	(1)	
001	13013-Z4H-003	RING SET, PISTON (0.75) (RIKEN)	(1)	1659243

001	13013-Z4H-003	RING SET, PISTON (0.75) (RIKEN)	(1)	
002	13101-ZH7-020	PISTON (STD.)	1	1703280
002	13101-ZH7-020	PISTON (STD.)	1	
002	13102-ZH7-020	PISTON (0.25)	(1)	1703280
002	13102-ZH7-020	PISTON (0.25)	(1)	
002	13102-ZH7-020	PISTON (0.25)	(1)	
002	13103-ZH7-020	PISTON (0.50)	(1)	1703280
002	13103-ZH7-020	PISTON (0.50)	(1)	
002	13103-ZH7-020	PISTON (0.50)	(1)	
002	13104-ZH7-020	PISTON (0.75)	(1)	1703280
002	13104-ZH7-020	PISTON (0.75)	(1)	
002	13104-ZH7-020	PISTON (0.75)	(1)	
003	13111-ZE0-000	PIN, PISTON	1	
004	13200-Z0S-800	ROD ASSY., CONNECTING	1	
005	90001-ZE1-000	BOLT, CONNECTING ROD	2	
006	90551-ZE0-000	CLIP, PISTON PIN, 13MM	2	

GX120T1(QHB1)	E-9 CAMSHAFT

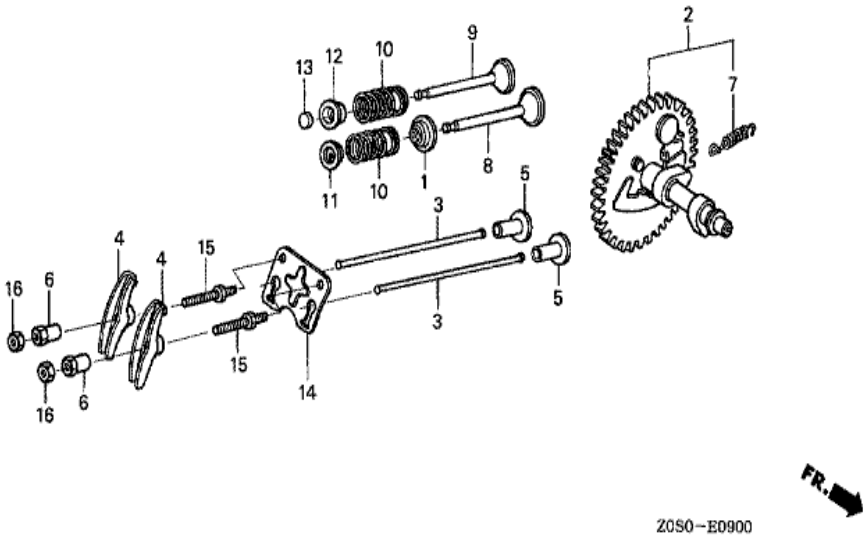

Ref	Partnumber	Description	GX120T1	Serial Numbers
001	12209-ZH8-003	SEAL, VALVE STEM	1	
001	12209-ZH8-003	SEAL, VALVE STEM	1	
002	14100-ZE0-812	CAMSHAFT ASSY.	1	
003	14410-ZE0-010	ROD, PUSH	2	
004	14431-ZE1-000	ARM, VALVE ROCKER	2	
005	14441-ZE1-010	LIFTER, VALVE	2	
006	14451-ZE1-013	PIVOT, ROCKER ARM	2	
007	14568-ZE1-000	SPRING, WEIGHT RETURN	1	
008	14711-ZF0-010	VALVE, IN.	1	
008	14711-ZF0-010	VALVE, IN.	1	
009	14721-ZF0-000	VALVE, EX.	1	
009	14721-ZF0-000	VALVE, EX.	1	
010	14751-ZF1-000	SPRING, VALVE	2	
Ref	Partnumber	Description	GX120T1	Serial Numbers
011	14771-ZE1-000	RETAINER, IN. VALVE SPRING	1	
011	14771-ZE1-000	RETAINER, IN. VALVE SPRING	1	

012	14773-Z4X-000	RETAINER, EX. VALVE SPRING	1
012	14773-Z4X-000	RETAINER, EX. VALVE SPRING	1
012	14773-Z4X-000	RETAINER, EX. VALVE SPRING	1
013	14781-ZE1-000	ROTATOR, VALVE	1
014	14791-ZE0-010	PLATE, PUSH ROD GUIDE	1
015	90012-ZE0-010	BOLT, PIVOT, 8MM	2
016	90206-ZE1-000	NUT, PIVOT ADJUSTING	2

GX120T1(QHB1)	EOP-2 MUFFLER COVER

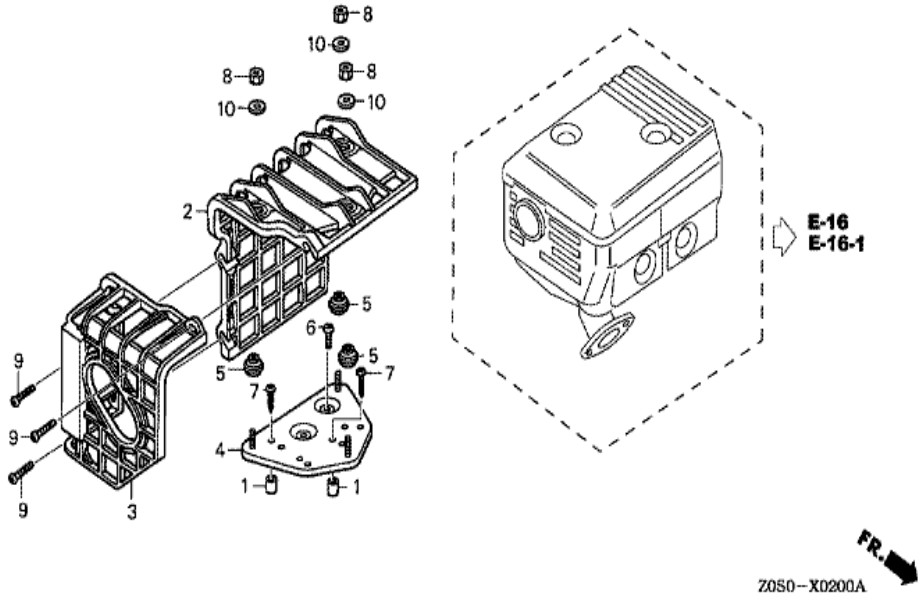

Ref	Partnumber	Description	GX120T1	Serial Numbers
001	17233-896-701	COLLAR, AIR CLEANER CASE	(2)	
002	18433-ZH8-W40	COVER COMP., MUFFLER	(1)	
003	18434-ZH8-W40	COVER COMP., RR. MUFFLER	(1)	
004	18436-ZH8-W41	BASE COMP., MUFFLER COVER	(1)	
005	18466-ZH8-W40	SPACER, MUFFLER COVER	(3)	
006	90050-ZE1-000	SCREW, TAPPING, 5X8	(1)	
007	90050-ZH8-W40	SCREW, TAPPING, 5X25	(2)	
008	90302-KF9-900	NUT, HEX., 5MM	(3)	
009	93891-0602007	SCREW-WASHER, 6X20	(3)	
010	94103-05700	WASHER, PLAIN, 5MM	(3)	