FORM MS-3379-10/21/2009
REPLACES FORM MS-3379-06/19/2009
FILE IN SECT. 2 OF SERVICE MANUAL
122400

Illustrated Parts List
122400

TYPE NUMBERS
0033 through 0251.

Model Series

TABLE OF CONTENTS

Air Cleaner 7
Blower Housing 8
Camshaft 2
Carburetor 4
Controls 6
Crankcase Cover 2
Crankshaft 2
Cylinder 2
Cylinder Head 3
Electric Starter 8
Exhaust System 7
Flywheel 8
Fuel Supply 5
Governor Spring 6
Gear Reduction 8
Ignition 6
Kits/Gaskets - Carburetor 5
Kits/Gaskets - Engine 2
Kits/Gaskets - Valve 3
Lubrication 2
Piston Group 2
Rewind Starter 8

Not for Reproduction

PRINTED IN U.S.A.

COPYRIGHT by BRIGGS & STRATTON CORPORATION
All rights reserved. No part of this material may be reproduced or transmitted, in any form or by any means, electronic or mechanical, including photocopying, recording or by any information storage and retrieval system, without permission in writing from Briggs & Stratton Corporation.

122400

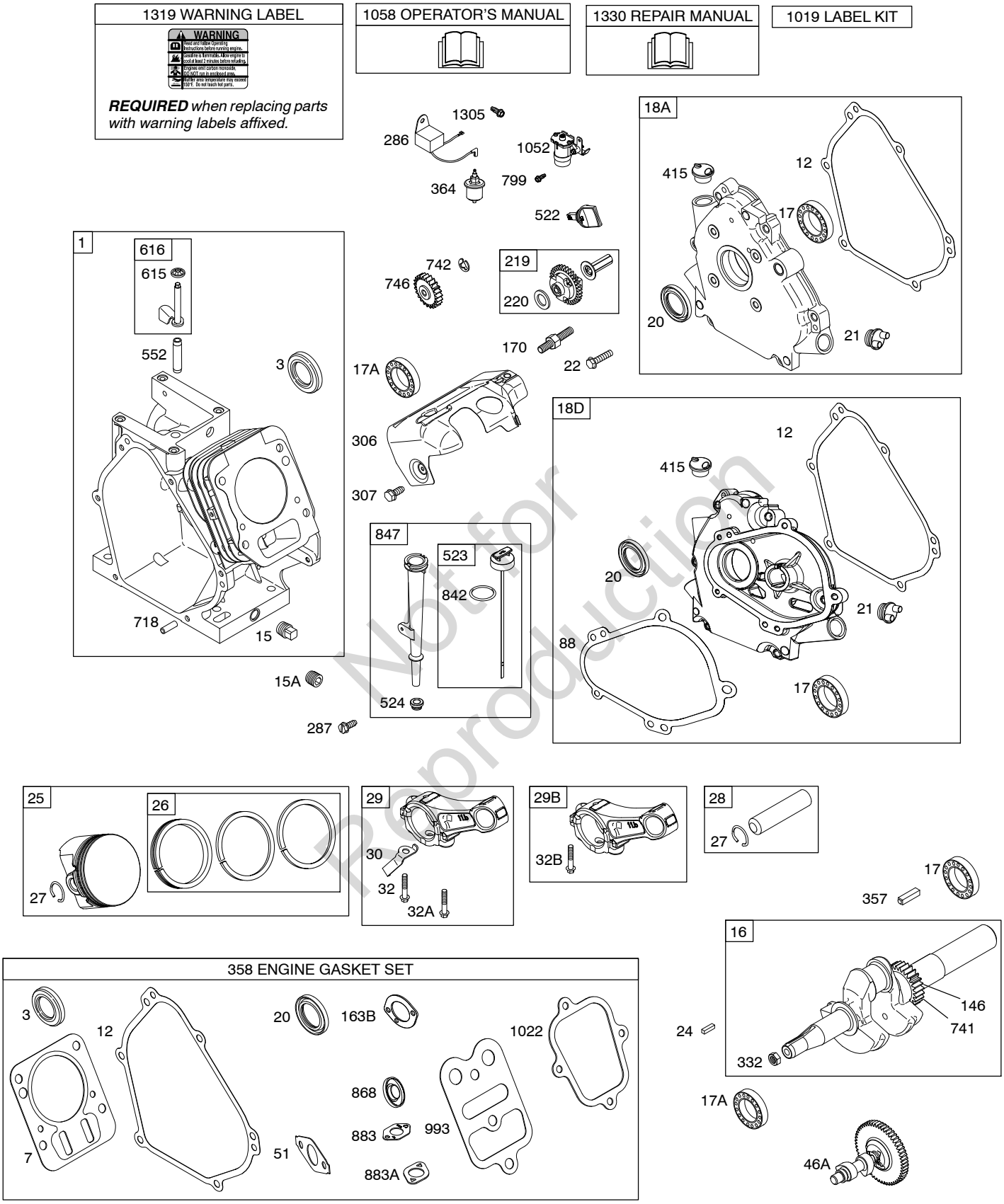

Not for Reproduction

Illustrations cover a range of engines. Parts shown without corresponding text may not be used on your specific engine.

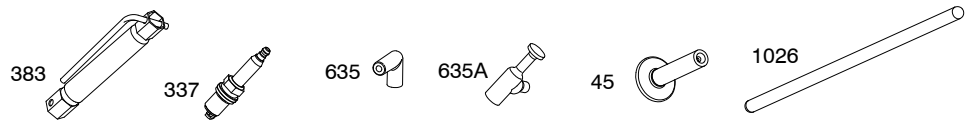

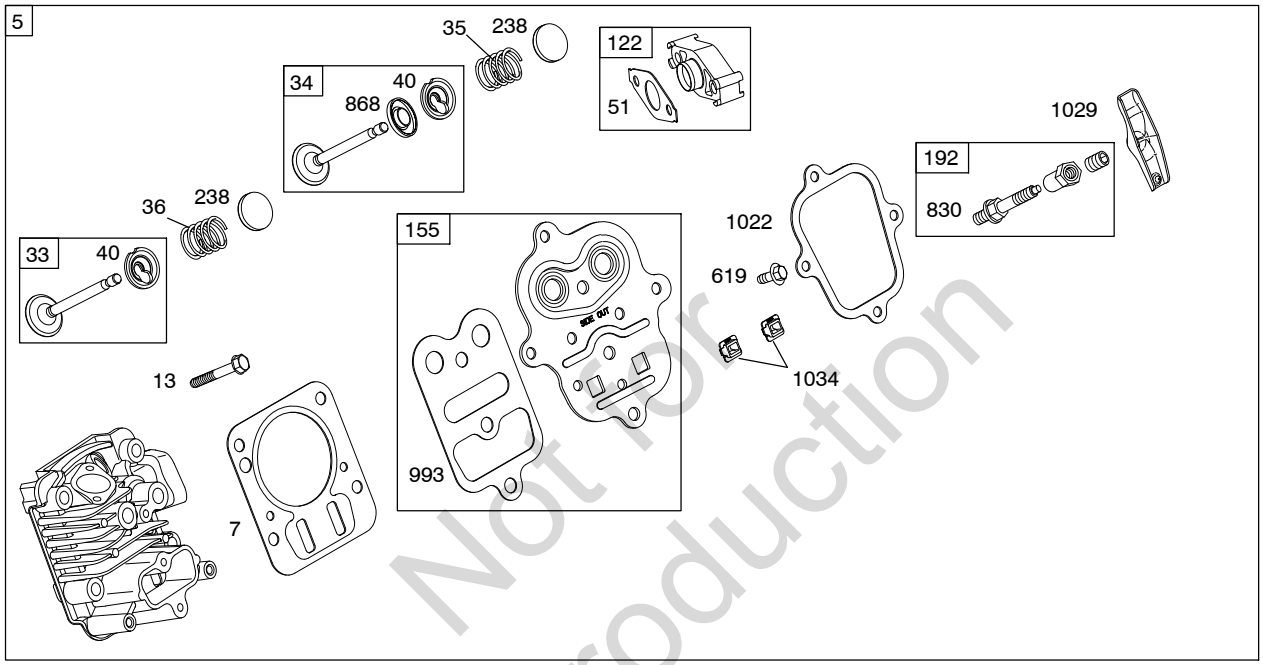

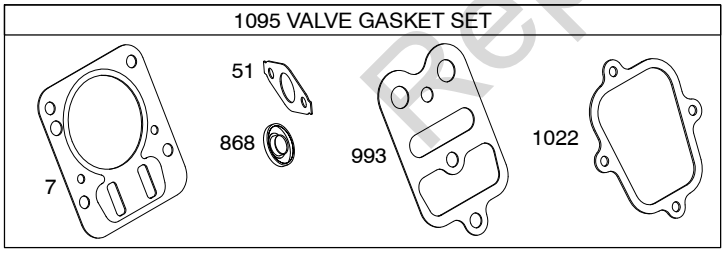

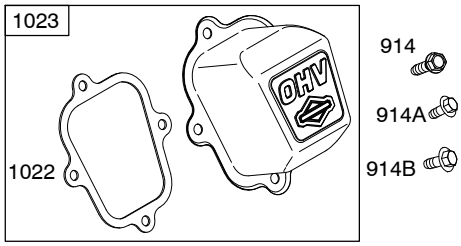

Not for Reproduction

Illustrations cover a range of engines. Parts shown without corresponding text may not be used on your specific engine.

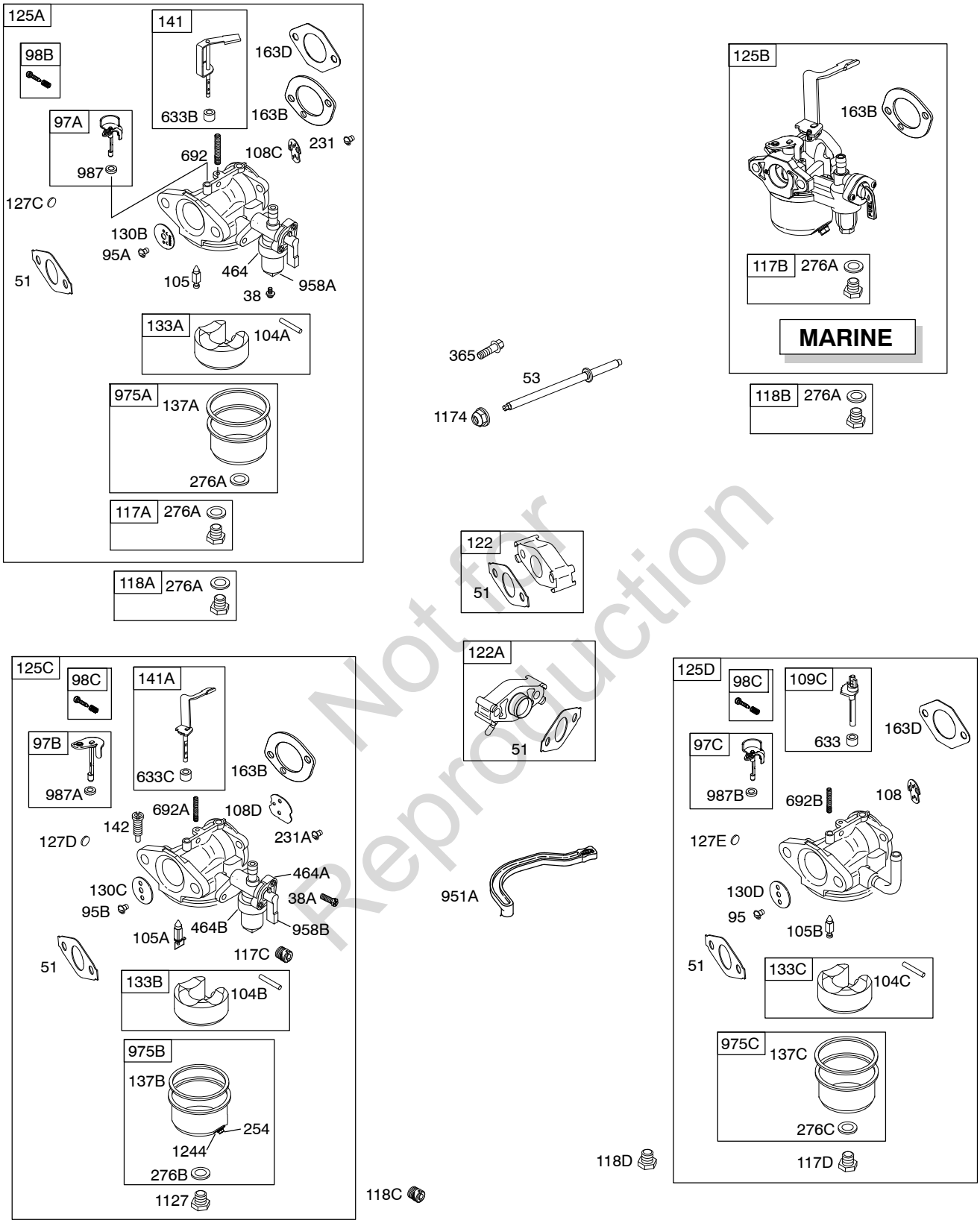

Not for Reproduction

Illustrations cover a range of engines. Parts shown without corresponding text may not be used on your specific engine.

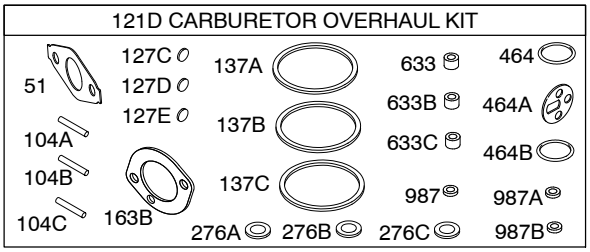

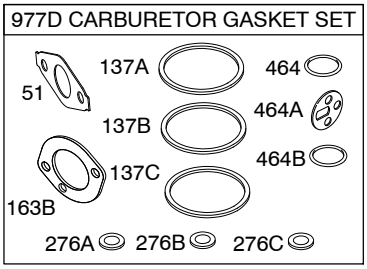

Not for Reproduction

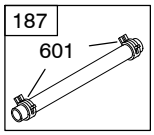

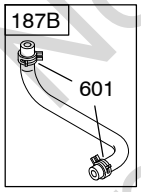

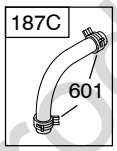

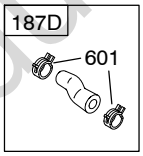

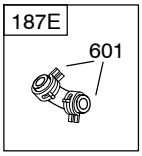

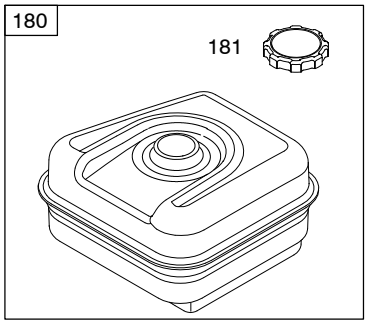

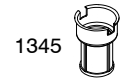

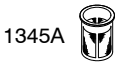

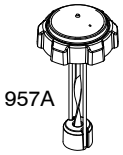

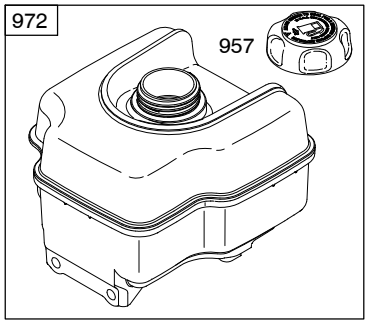

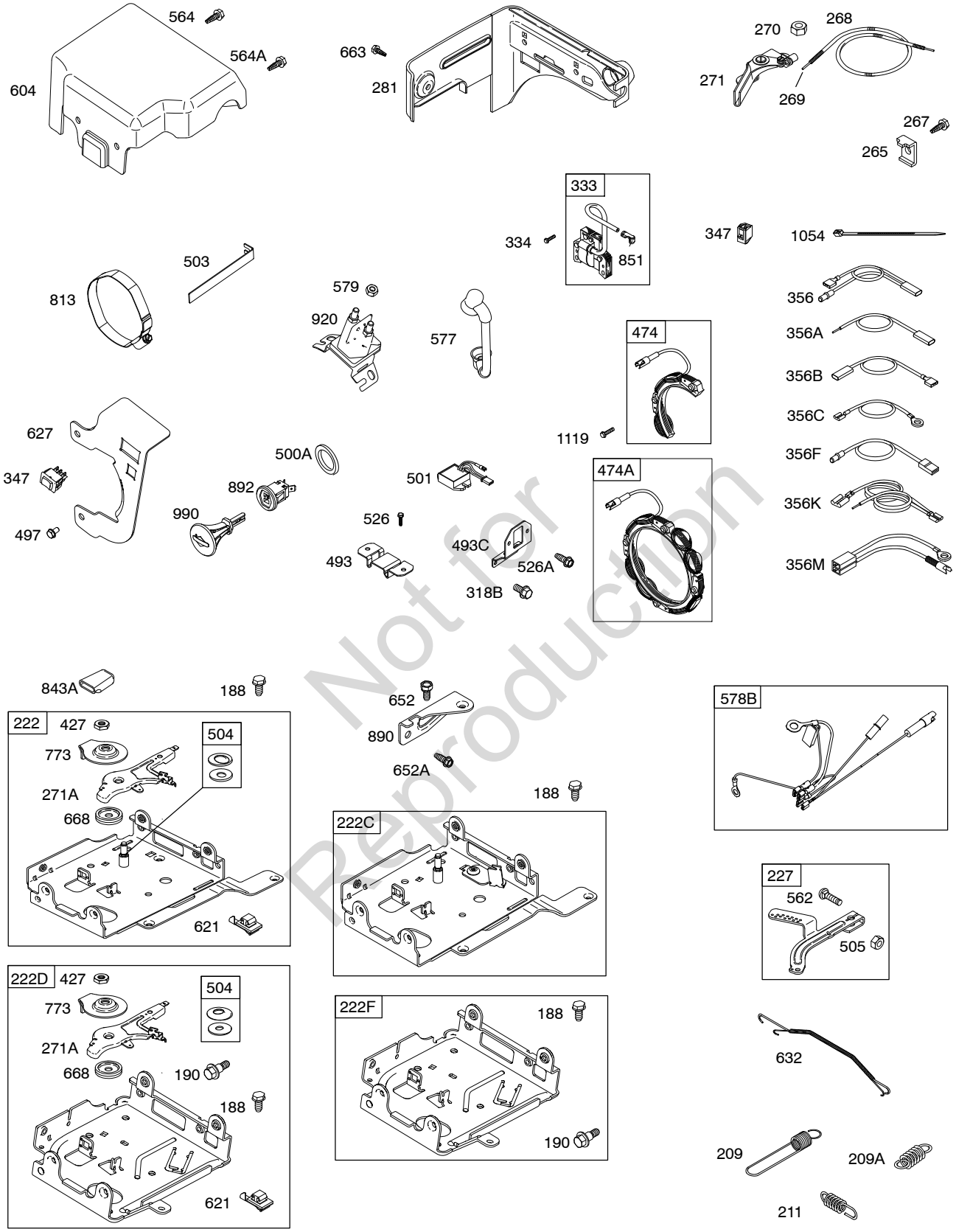

Not for Reproduction

Illustrations cover a range of engines. Parts shown without corresponding text may not be used on your specific engine.

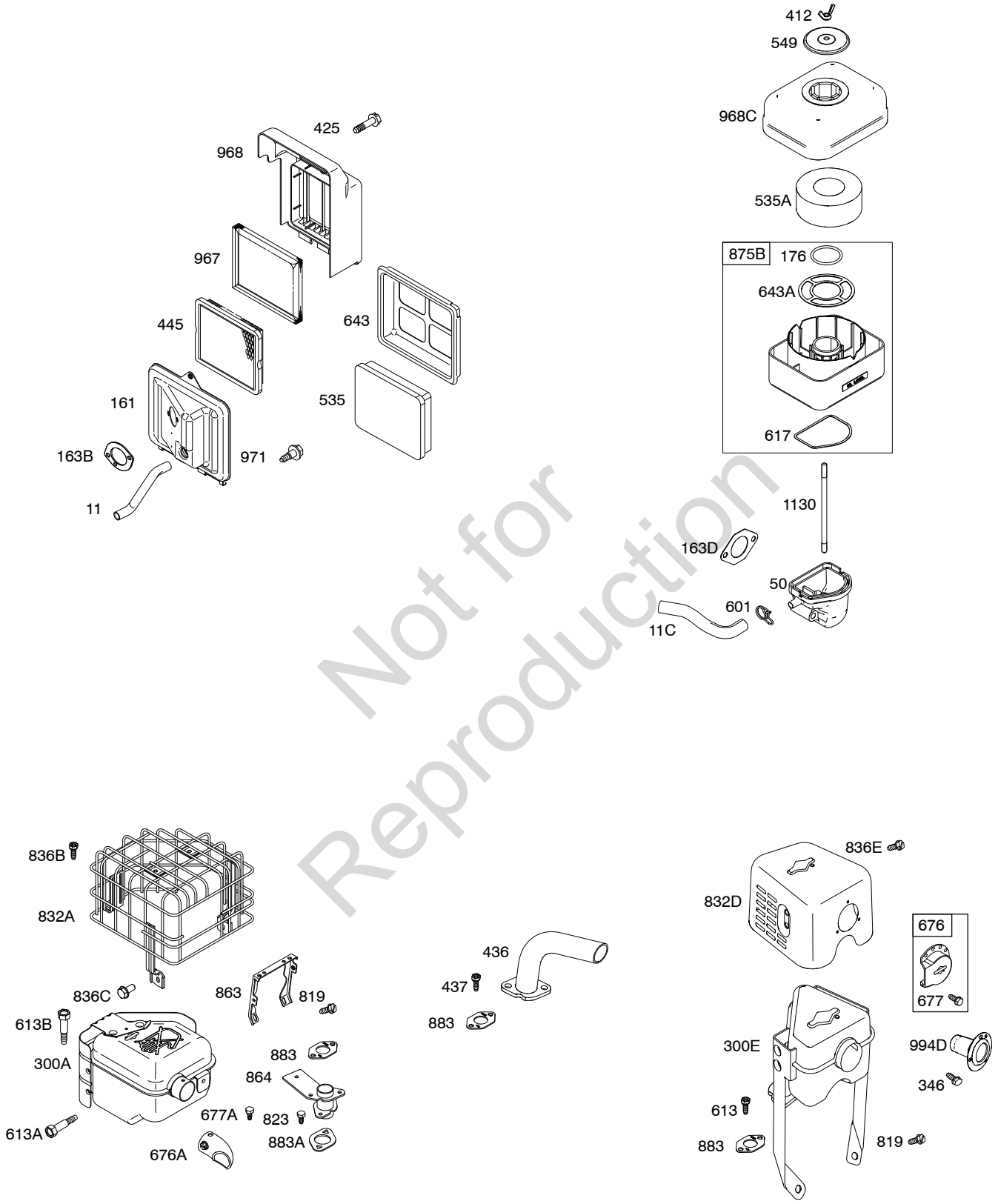

Not for Reproduction

Illustrations cover a range of engines. Parts shown without corresponding text may not be used on your specific engine.

Assemblies include all parts shown in frames.

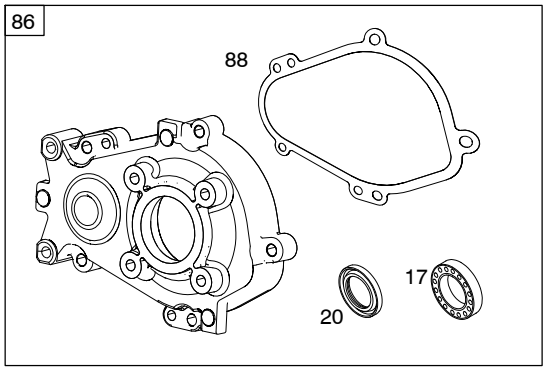

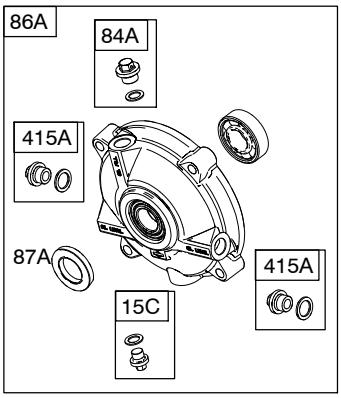

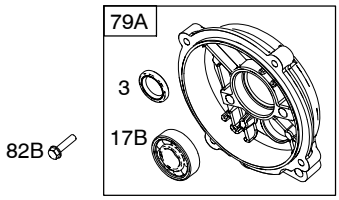

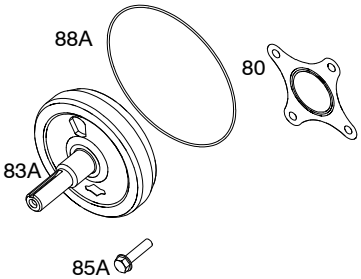

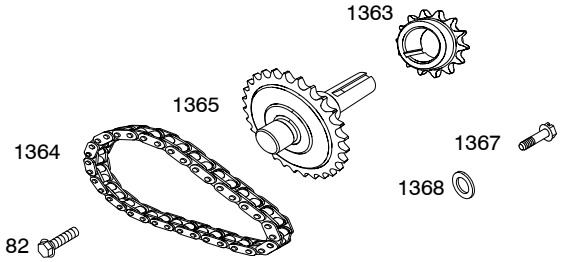

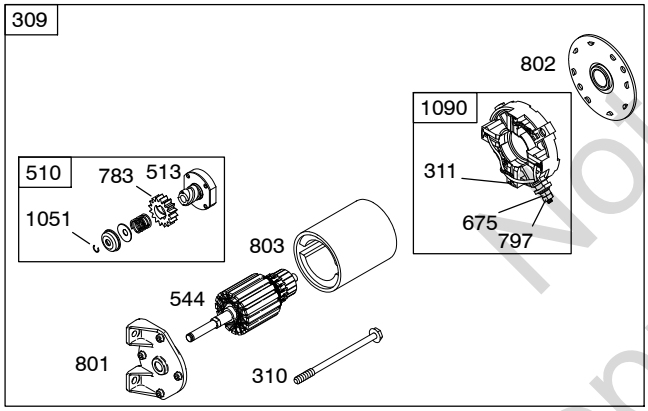

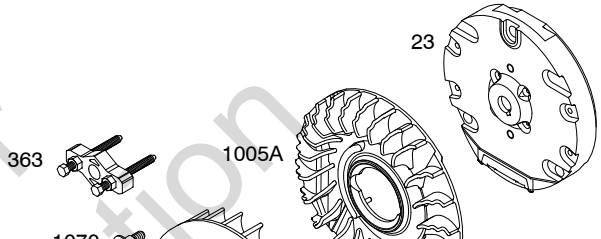

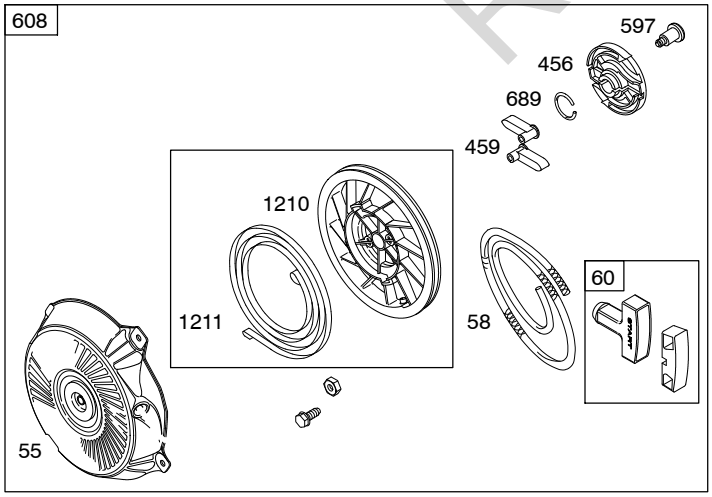

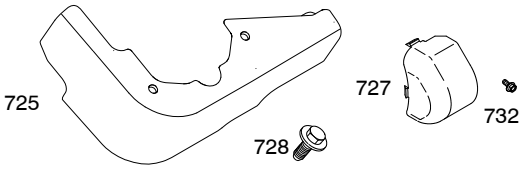

1036 EMISSIONS LABEL

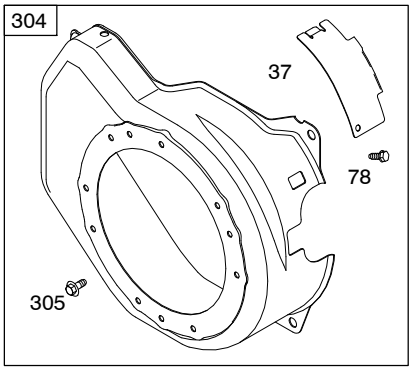

Not for Reproduction

Illustrations cover a range of engines. Parts shown without corresponding text may not be used on your specific engine.

REF. NO.	PART NO.	DESCRIPTION
1	699490	Cylinder Assembly **------- Note -----** **793704** Cylinder-Assembly Used on Type No(s). 0134, 0168.
3	★299819S	Seal-Oil
5	797439	Head-Cylinder (Metric) (Used After Code Date 09061700). **------- Note -----** **699486** Head-Cylinder (SAE) (Used Before Code Date 09061800).
7	★∅698210	Gasket-Cylinder Head
11	812208	Tube-Breather (Flat Panel Air Cleaner)
11C	793418	Tube-Breather (Oil Bath Air Cleaner)
12	★699485	Gasket-Crankcase
13	699482	Screw (Cylinder Head)
15	691686	Plug-Oil Drain (Square Head)
15A	691682	Plug-Oil Drain (Flush)
15C	792750	Plug-Oil Drain
16	699835	Crankshaft Used on Type No(s). 0112, 0115, 0151, 0156, 0162, 0163, 0169, 0226, 0227, 0228, 0238. **------- Note -----** **699443** Crankshaft Used on Type No(s). 0036, 0100, 0113, 0114, 0124, 0125, 0135, 0136, 0137, 0138, 0139, 0146, 0150, 0157, 0159, 0167, 0168, 0170, 0178, 0180, 0182, 0194, 0196, 0200, 0203, 0207, 0210, 0214, 0223, 0224, 0225, 0230, 0234, 0237, 0242, 0243, 0245, 0249, 0250. **790329** Crankshaft Used on Type No(s). 0111, 0121, 0126, 0130, 0134, 0154, 0181, 0190, 0201, 0208, 0229, 0232, 0235, 0236, 0248. **698879** Crankshaft Used on Type No(s). 0033, 0110, 0118, 0119, 0122, 0123, 0127, 0128, 0129, 0132, 0176, 0187, 0188, 0205, 0211, 0239, 0240, 0241. **699453** Crankshaft Used on Type No(s). 0120. **793327** Crankshaft Used on Type No(s). 0160, 0173, 0174. **793677** Crankshaft Used on Type No(s). 0195. **699441** Crankshaft Used on Type No(s). 0199, 0251, 0252. **699451** Crankshaft Used on Type No(s). 0197. **792883** Crankshaft Used on Type No(s). 0202.
17	692517	Bearing-Ball
17A	690824	Bearing-Ball
17B	99158	Bearing-Ball
18A	790337	Cover-Crankcase Used on Type No(s). 0033, 0100, 0110, 0112, 0113, 0114, 0115, 0118, 0119, 0122, 0123, 0124, 0125, 0127, 0128, 0129, 0132, 0135, 0136, 0137, 0138, 0139, 0146, 0151, 0152, 0156, 0157, 0159, 0160, 0162, 0163, 0167, 0169, 0170, 0173, 0174, 0176, 0178, 0180, 0182, 0194, 0195, 0196, 0203, 0205, 0207, 0210, 0211, 0214, 0223, 0224, 0225, 0226, 0227, 0228, 0230, 0234, 0237, 0238, 0239, 0240, 0241, 0242, 0243, 0245, 0249, 0250. **------- Note -----** **699672** Cover-Crankcase Used on Type No(s). 0036, 0150, 0187, 0188, 0199, 0200, 0251, 0252. **699804** Cover-Crankcase Used on Type No(s). 0202.
18D	790330	Cover-Crankcase Used on Type No(s). 0111, 0121, 0126, 0130, 0134, 0154, 0168, 0181, 0190, 0201, 0208, 0229, 0232, 0235, 0236, 0248.
20	★692550	Seal-Oil (PTO Side)
21	281658S	Cap-Oil Fill
22	699478	Screw (Crankcase Cover/ Sump)

★ Included in Engine Gasket Set-Ref. No.358.
● Included in Carburetor Overhaul Kit-Ref. No. 121.
◆ Included in Carburetor Gasket Set-Ref. No. 977.
∅ Included in Valve Gasket Set-Ref. No 1095.

Illustrations cover a range of engines. Parts shown without corresponding text may not be used on your specific engine.

Not for Reproduction

122400

REF. NO.	PART NO.	DESCRIPTION
23	699488	Flywheel
		------- Note -----
		699514 Flywheel Used on Type No(s). 0121, 0150, 0154, 0156, 0163, 0190, 0201, 0205, 0228, 0229, 0230, 0232, 0236, 0238, 0243, 0248.
		790328 Flywheel Used on Type No(s). 0245.
24	222698S	Key-Flywheel
25	792004	Piston Assembly (Standard)
		------- Note -----
		797820 Piston Assembly (.010" Oversize)
		791325 Piston Assembly (.020" Oversize)
26	791969	Ring Set (Standard) (Used After Code Date 05093000).
		------- Note -----
		499631 Ring Set (Standard) (Used Before Code Date 05100100).
		797821 Ring Set (.010" Oversize)
		791324 Ring Set (.020" Oversize) (Used After Code Date 05093000).
		692786 Ring Set (.020" Oversize) (Used Before Code Date 05100100).
27	691866	Lock-Piston Pin
28	499423	Pin-Piston
29	690124	Rod-Connecting (Used Before Code Date 07081600).
		------- Note -----
		792247 Rod-Connecting (.020" Undersize)
29B	797436	Rod-Connecting (Metric) (Used After Code Date 09053100).
		------- Note -----
		795636 Rod-Connecting (SAE) (Used After Code Date 07081500 and Before Code Date 09060100).
30	791584	Dipper-Connecting Rod
32	691664	Screw (Connecting Rod)
32A	695759	Screw (Connecting Rod)
32B	797437	Screw (Connecting Rod) (Metric) (Used After Code Date 09053100).
		------- Note -----
		791784 Screw (Connecting Rod) (SAE) (Used Before Code Date 09060100).
33	499642	Valve-Exhaust
34	499641	Valve-Intake
35	691304	Spring-Valve (Intake)
36	691304	Spring-Valve (Exhaust)
37	699661	Guard-Flywheel
38	698557	Screw (Shut Off Valve)
38A	797150	Screw (Shut Off Valve)
40	692194	Retainer-Valve
45	690977	Tappet-Valve
46A	696813	Camshaft
		------- Note -----
		793703 Camshaft Used on Type No(s). 0134, 0168.
50	793419	Manifold-Intake
51★●◆∅	692555	Gasket-Intake
53	793414	Stud (Carburetor)
55	691422	Housing-Rewind Starter (Rewind Starter Parts Used With 3MM Diameter Starter Rope)
		------- Note -----
		791848 Housing-Rewind Starter (Rewind Starter Parts Used With 5MM Diameter Starter Rope)
58	693389	Rope-Starter (Rewind Starter Parts Used With 3MM Diameter Starter Rope)
		------- Note -----
		66574 Rope-Starter (Rewind Starter Parts Used With 5MM Diameter Starter Rope)
60	490652	Grip-Starter Rope
65	699851	Screw (Rewind Starter) (Metric)
		------- Note -----
		699228 Screw (Rewind Starter)(SAE)
78	699205	Screw (Flywheel Guard)
79A	792746	Case-Gear Reduction
80	792755	Gasket-Gear Case

★ Included in Engine Gasket Set-Ref. No.358.
● Included in Carburetor Overhaul Kit-Ref. No. 121.
◆ Included in Carburetor Gasket Set-Ref. No. 977.
∅ Included in Valve Gasket Set-Ref. No 1095.

Illustrations cover a range of engines. Parts shown without corresponding text may not be used on your specific engine.

Not for Reproduction

REF. NO.	PART NO.	DESCRIPTION
82	807421	Screw (Gear Reduction Case)
82B	792753	Screw (Gear Reduction Case)
83A	792756	Shaft-Auxiliary Drive
84A	792759	Plug-Breather
85A	690711	Screw (Gear Cover to Gear Reduction)
86	790332	Cover-Gear
86A	795647	Cover-Gear
87A	792752	Seal-Gear Reduction
88	790333	Gasket-Gear Reduction Cover
88A	792760	Gasket-Gear Reduction Cover
95	691636	Screw (Throttle Valve)
95A	698544	Screw (Throttle Valve)
95B	797161	Screw (Throttle Valve)
97A	698542	Shaft-Throttle
97B	797153	Shaft-Throttle
97C	797628	Shaft-Throttle
98B	698551	Kit-Idle Speed
98C	797156	Kit-Idle Speed
104A	●698536	Pin-Float Hinge
104B	●797138	Pin-Float Hinge
104C	●797622	Pin-Float Hinge
105	698537	Valve-Float Needle
105A	797139	Valve-Float Needle
105B	797623	Valve-Float Needle
108	692567	Valve-Choke
108C	698546	Valve-Choke
108D	797159	Valve-Choke
109C	790624	Shaft-Choke
117A	698666	Jet-Main (Standard)
		------- Note -----
		793415 Jet-Main (Standard) Used on Type No(s). 0159, 0162, 0176, 0180, 0181, 0237.
117B	793708	Jet-Main (Standard)
117C	797140	Jet-Main (Standard)
117D	797574	Jet-Main (Standard)
118A	698552	Jet-Main (High Altitude)
		------- Note -----
		793416 Jet-Main (High Altitude) Used on Type No(s). 0159, 0162, 0176, 0180, 0181, 0237.
118B	793709	Jet-Main (High Altitude)
118C	797141	Jet-Main (High Altitude)
118D	797575	Jet-Main (High Altitude)
121D	797634	Kit-Carburetor Overhaul
122	★●795643	Spacer-Carburetor
122A	695286	Spacer-Carburetor Used on Type No(s). 0210.
125A	698558	Carburetor (Used Before Code Date 09030100).
		------- Note -----
		793411 Carburetor Used on Type No(s). 0159, 0162, 0176, 0180, 0181, 0237. **793711** Carburetor Used on Type No(s). 0160, 0229, 0232, 0248.
125B	793707	Carburetor (Not Serviced Separately, Order Replacement Carburetor) Used on Type No(s). 0134, 0168.
125C	796447	Carburetor (Used After Code Date 09022800).
125D	797573	Carburetor Used on Type No(s). 0241, 0242.
127C	●690727	Plug-Welch
127D	●797135	Plug-Welch
127E	●797633	Plug-Welch
130B	698543	Valve-Throttle
130C	797154	Valve-Throttle
130D	797630	Valve-Throttle
133A	698539	Float-Carburetor
133B	797136	Float-Carburetor
133C	797626	Float-Carburetor
137A	●◆698538	Gasket-Float Bowl
137B	●◆797137	Gasket-Float Bowl
137C	●◆797625	Gasket-Float Bowl
141	698545	Kit-Choke Shaft
		------- Note -----
		793413 Kit-Choke Shaft Used on Type No(s). 0159, 0162, 0176, 0180, 0181, 0237. **793710** Kit-Choke Shaft Used on Type No(s). 0160, 0229, 0232, 0248.
141A	797158	Kit-Choke Shaft
142	797151	Nozzle-Carburetor
146	690979	Key-Timing
		------- Note -----
		790943 Key-Timing Used on Type No(s). 0111, 0121, 0126, 0130, 0134, 0154, 0181, 0190, 0201, 0208, 0229, 0232, 0235, 0236, 0248.
155	797442	Plate-Cylinder Head (Metric) (Used After Code Date 09061700).
		------- Note -----
		698214 Plate-Cylinder Head (SAE) (Used Before Code Date 09061800).

★ Included in Engine Gasket Set-Ref. No.358.
● Included in Carburetor Overhaul Kit-Ref. No. 121.
◆ Included in Carburetor Gasket Set-Ref. No. 977.
∅ Included in Valve Gasket Set-Ref. No 1095.

Illustrations cover a range of engines. Parts shown without corresponding text may not be used on your specific engine.

Not for Reproduction

122400

REF. NO.	PART NO.	DESCRIPTION
161	699207	Base-Air Cleaner (Metal) (Flat Panel Air Cleaner)
163B★●◆	696024	Gasket-Air Cleaner (Flat Panel Air Cleaner)
163D	793412	Gasket-Air Cleaner (Oil Bath Air Cleaner)
170	699818	Stud (Crankcase Cover)
176	793441	Seal-O Ring (Air Cleaner Base)
180	795832	Tank-Fuel (Metal) (Used After Code Date 08051100). **------- Note -----** **794640** Tank-Fuel (Metal) (Used After Code Date 07050800 and Before Code Date 08051200). **791598** Tank-Fuel (Metal) (Used Before Code Date 07050900).
181	794641	Cap-Fuel Tank (Metal) (Used After Code Date 07050800). **------- Note -----** **699840** Cap-Fuel Tank (Metal) (Used Before Code Date 07050900).
187	791745	Line-Fuel (Cut to Required Length)
187B	791874	Line-Fuel (Molded)
187C	797184	Line-Fuel (Molded)
187D	795046	Line-Fuel (Molded)
187E	797183	Line-Fuel (Molded)
188	699479	Screw (Control Bracket)
190	699220	Screw (Fuel Tank)
190B	795047	Screw (Fuel Tank) (Used After Code Date 08051100). **------- Note -----** **699839** Screw (Fuel Tank) (Used Before Code Date 08051200).
192	797440	Adjuster-Rocker Arm (Metric) (Used After Code Date 09061700). **------- Note -----** **694543** Adjuster-Rocker Arm (SAE) (Used Before Code Date 09061800).
209	692571	Spring-Governor **------- Note -----** **693206** Spring-Governor Used on Type No(s). 0033, 0119, 0122, 0128, 0129, 0132, 0160, 0169, 0195, 0197, 0199, 0229, 0232, 0248. **693710** Spring-Governor Used on Type No(s). 0150.
209A	691278	Spring-Governor
211	692069	Spring-Governor Idle
219	693578	Gear-Governor
220	691724	Washer (Governor Gear)
222	699589	Bracket-Control (Used Before Code Date 07030100).
222C	699493	Bracket-Control (Used Before Code Date 07030100).
222D	795669	Bracket-Control (Used With Metal Fuel Tank) (Used After Code Date 08051100). **------- Note -----** **793107** Bracket-Control (Used With Metal Fuel Tank) (Used After Code Date 07022800 and Before Code Date 08051200). **793107** Bracket-Control (Used With Plastic Fuel Tank) (Used After Code Date 08051100).
222F	795668	Bracket-Control (Used With Metal Fuel Tank) (Used After Code Date 08051100). **------- Note -----** **793100** Bracket-Control (Used With Metal Fuel Tank) (Used After Code Date 07022800 and Before Code Date 08051200). **793100** Bracket-Control (Used With Plastic Fuel Tank) (Used After Code Date 08051100).

★ Included in Engine Gasket Set-Ref. No.358.
● Included in Carburetor Overhaul Kit-Ref. No. 121.
◆ Included in Carburetor Gasket Set-Ref. No. 977.
∅ Included in Valve Gasket Set-Ref. No 1095.

Illustrations cover a range of engines. Parts shown without corresponding text may not be used on your specific engine.

Not for Reproduction

REF. NO.	PART NO.	DESCRIPTION
227	692573	Lever-Governor Control
231	690718	Screw (Choke Valve)
231A	797160	Screw (Choke Valve)
238	691300	Valve-Cap
240	298090S	Filter-Fuel
		------- Note -----
		394358S Filter-Fuel Used on Type No(s). 0241, 0242.
254	797145	Drain-Carburetor Bowl
265	691024	Clamp-Casing
267	699492	Screw (Casing Clamp)
268	691025	Casing-Control Wire (Cut to Required Length)
269	691026	Wire-Control (Cut to Required Length)
270	691027	Nut (Control Wire Casing)
271	691028	Lever-Control
271A	694256	Lever-Control
276A	●698540	Washer-Sealing
276B	●797147	Washer-Sealing
276C	●797632	Washer-Sealing
281	793133	Panel-Control (Used After Code Date 07022800).
		------- Note -----
		790261 Panel-Control (Used Before Code Date 07030100).
		793122 Panel-Control Used on Type No(s). 0136, 0150, 0197, 0199, 0200, 0202, 0251, 0252.
		793133 Panel-Control Used on Type No(s). 0121, 0156, 0163, 0201, 0229, 0232, 0236, 0245, 0248.
		795565 Panel-Control Used on Type No(s). 0241, 0242.

REF. NO.	PART NO.	DESCRIPTION
286	794185	Module-Oil Sensor
287	699629	Screw (Dipstick Tube)
300A	699231	Muffler
300E	791595	Muffler
304	699598	Housing-Blower
305	699481	Screw (Blower Housing)
306	693610	Shield-Cylinder
307	699483	Screw (Cylinder Shield)
309	694504	Motor-Starter
310	690323	Screw (Starter Motor)
311	497608	Brush Set
318B	793567	Screw (Mounting Bracket)
332	792723	Nut (Flywheel)
333	695711	Armature-Magneto
334	699477	Screw (Magneto Armature)
337	491055S	Plug-Spark (Resistor)
		------- Note -----
		691043 Plug-Spark (EMS)
346	690661	Screw (Spark Arrestor)
347	698338	Switch-Rocker
		------- Note -----
		697854 Switch-Rocker Used on Type No(s). 0033, 0100, 0110, 0112, 0114, 0118, 0119, 0122, 0123, 0125, 0136, 0146, 0150, 0154, 0157, 0162, 0167, 0170, 0178, 0190, 0182, 0187, 0188, 0195, 0196, 0205, 0207, 0211, 0226, 0238, 0239, 0240, 0242, 0243, 0245.
		790949 Switch-Rocker Used on Type No(s). 0201.

REF. NO.	PART NO.	DESCRIPTION
356	693651	Wire-Stop
356A	692390	Wire-Stop
356B	692602	Wire-Stop
		------- Note -----
		797907 Wire-Stop Used on Type No(s). 0248.
356C	695630	Wire-Stop
356F	697397	Wire-Stop
356K	791765	Wire-Stop
356M	792609	Wire-Stop
357	692191	Key-Drive Pulley
358	791797	Gasket Set-Engine
363	19203	Puller-Flywheel
364	695693	Terminal-Oil Plug
365	699484	Screw (Carburetor)
383	19374S	Wrench-Spark Plug
412	793443	Nut (Air Cleaner Cover)
415	693463	Plug
415A	792749	Plug
425	699208	Screw (Air Cleaner Cover)
427	694255	Nut (Control Bracket)
436	793706	Manifold-Exhaust
437	791972	Screw (Exhaust Manifold)
445	491588S	Filter-Air Cleaner Cartridge (Flat Panel)
455	692591	Cup-Flywheel
456	692299	Plate-Pawl Friction
459	281505S	Pawl-Ratchet
464	◆698550	Seal-O Ring (Fuel Shut Off Valve)
464A	◆797148	Seal-O Ring (Fuel Shut Off Valve)
464B	◆797155	Seal-O Ring (Fuel Shut Off Valve)

★ Included in Engine Gasket Set-Ref. No.358.
● Included in Carburetor Overhaul Kit-Ref. No. 121.
◆ Included in Carburetor Gasket Set-Ref. No. 977.
∅ Included in Valve Gasket Set-Ref. No 1095.

Illustrations cover a range of engines. Parts shown without corresponding text may not be used on your specific engine.

Not for Reproduction

122400

REF. NO.	PART NO.	DESCRIPTION
474	695730	Alternator
		------- Note -----
		793640 Alternator Used on Type No(s). 0150.
		695466 Alternator Used on Type No(s). 0229, 0232, 0248, 0251.
		790320 Alternator Used on Type No(s). 0245.
474A	698314	Alternator
493	691177	Bracket-Mounting
493C	699048	Bracket-Mounting
497	691693	Screw (Stop Switch Bracket)
500A	792613	Washer (Key Switch)
501	698315	Regulator
		------- Note -----
		691185 Regulator Used on Type No(s). 0229, 0232.
		790325 Regulator Used on Type No(s). 0245.
503	691532	Strap-Starter
504	694254	Washer Set-Friction
505	691251	Nut (Governor Control Lever)
510	499308	Drive-Starter
513	692024	Drive-Clutch
522	697689	Plug-Dipstick/Fill
523	693618	Dipstick
524	281370S	Seal-Dipstick Tube
526	690297	Screw (Regulator)
526A	690326	Screw (Regulator)
535	696263	Filter-Air Cleaner Foam
535A	792472	Filter-Air Cleaner Foam
544	692966	Armature-Starter
549	793434	Washer (Air Cleaner Cover)
552	692346	Bushing-Governor Crank
562	691119	Bolt (Governor Control Lever)
564	699491	Screw (Control Cover)
564A	699206	Screw (Control Cover)
577	690795	Cable-Starter
578B	790948	Wire Assembly
579	691029	Nut (Starter Cable)
597	691696	Screw (Pawl Friction Plate)
601	791850	Clamp-Hose
604	697326	Cover-Control
608	693394	Starter-Rewind (Rewind Starter Parts Used With 3MM Diameter Starter Rope)
		------- Note -----
		791670 Starter-Rewind (Rewind Starter Parts Used With 5MM Diameter Starter Rope)
613	699209	Screw (Muffler)
613A	699481	Screw (Muffler)
613B	697812	Screw (Muffler)
615	692576	Retainer-Governor Shaft
616	692547	Crank-Governor
617	793440	Seal-O Ring (Intake Manifold)
619	699481	Screw (Cylinder Head Plate)
621	692310	Switch-Stop
627	792608	Bracket-Stopswitch
632	693408	Spring/Link-Mechanical Governor
633	●693867	Seal-Choke/Throttle Shaft
633B	●690998	Seal-Choke/Throttle Shaft
633C	●797157	Seal-Choke/Throttle Shaft
635	692076	Boot-Spark Plug
635A	692927	Boot-Spark Plug
643	696264	Retainer-Air Filter
643A	793424	Retainer-Air Filter
652	699755	Screw (Support Bracket)
652A	699481	Screw (Support Bracket)
663	699206	Screw (Control Panel)
668	694257	Spacer
675	691261	Washer (Brush Retainer)
676	393760	Deflector-Muffler
676A	697816	Deflector-Muffler
677	699776	Screw (Muffler Deflector)
677A	690661	Screw (Muffler Deflector)
689	691855	Spring-Friction
692	690572	Spring-Detent
692A	797134	Spring-Detent
692B	797624	Spring-Detent
697	793567	Screw (Starter Motor)
718	690959	Pin-Locating
725	792874	Shield-Heat
727	698039	Cover-Starter Drive
728	699632	Screw (Heat Shield)
732	699200	Screw (Starter Drive Cover)
741	695087	Gear-Timing
742	692564	Retainer-E Ring
746	790278	Gear-Idler
773	694258	Retainer
783	692353	Gear-Pinion

★ Included in Engine Gasket Set-Ref. No.358.
● Included in Carburetor Overhaul Kit-Ref. No. 121.
◆ Included in Carburetor Gasket Set-Ref. No. 977.
∅ Included in Valve Gasket Set-Ref. No 1095.

Illustrations cover a range of engines. Parts shown without corresponding text may not be used on your specific engine.

Not for Reproduction

REF. NO.	PART NO.	DESCRIPTION
797	691029	Nut (Brush Retainer)
799	699202	Screw (Oil Sensor)
801	694482	Cap-Drive
802	691286	Cap-End
803	693757	Housing-Starter
813	690635	Clamp
819	699233	Screw (Muffler Bracket)
823	699209	Screw (Muffler Adapter)
830	797441	Stud-Rocker Arm (Metric) (Used After Code Date 09061700).
		------- Note -----
		694544 Stud-Rocker Arm (SAE) (Used Before Code Date 09061800).
832A	697818	Guard-Muffler
832D	796240	Guard-Muffler (Used After Code Date 08062400).
		------- Note -----
		791600 Guard-Muffler (Used Before Code Date 08062500).
836B	699209	Screw (Muffler Guard)
836C	699234	Screw (Muffler Guard)
836E	699755	Screw (Muffler Guard)
842	691031	Seal-O Ring (Dipstick Tube)
843A	695588	Sleeve-Lever
847	693617	Dipstick/Tube Assembly
851	493880S	Terminal-Spark Plug
863	699229	Bracket-Muffler
864	699232	Adapter-Muffler
868	★∅692044	Seal-Valve
875B	793423	Base-Air Cleaner (Oil Bath Air Cleaner)
883	★691893	Gasket-Exhaust
883A	★692237	Gasket-Exhaust
890	790203	Bracket-Support
892	791944	Switch-Key
914	699481	Screw (Rocker Cover) (Bottom)
914A	797444	Screw (Rocker Cover) (Top)(Metric) (Used After Code Date 09061700).
		------- Note -----
		692557 Screw (Top)(SAE) (Used Before Code Date 09061800).
914B	797444	Screw (Rocker Cover) (Center)(Metric) (Used After Code Date 09061700).
		------- Note -----
		697551 Screw (Rocker Cover) (Center)(SAE) (Used Before Code Date 09061800).
920	691656	Solenoid-Starter
951A	797592	Lever-Choke
957	792647	Cap-Fuel Tank (Fresh Start)
		------- Note -----
		795027 Cap-Fuel Tank (Text Free)
957A	698109	Cap-Fuel Tank
958	698180	Valve-Fuel Shut Off
958A	698549	Valve-Fuel Shut Off
958B	797149	Valve-Fuel Shut Off
967	493537S	Filter-Pre Cleaner (Flat Panel)
968	692584	Cover-Air Cleaner (Flat Panel)
		------- Note -----
		698811 Cover-Air Cleaner (Flat Panel) Used on Type No(s). 0033, 0118, 0119, 0132, 0134, 0160, 0168, 0173, 0174, 0205, 0211, 0229, 0232, 0245, 0248.
968C	793425	Cover-Air Cleaner (Oil Bath Air Cleaner)
971	690370	Screw (Air Cleaner Base To Carburetor)
972	694260	Tank-Fuel
975A	698541	Bowl-Float
975B	797142	Bowl-Float
975C	797631	Bowl-Float
977D	797635	Gasket Set-Carburetor
987	698556	Seal-Throttle Shaft
987A	797152	Seal-Throttle Shaft
987B	797629	Seal-Throttle Shaft
993	∅694088	Gasket-Cylinder Head Plate
994D	793985	Arrester-Spark
990	695756	Key Set
1005	692592	Fan-Flywheel
1005A	794273	Fan-Flywheel
1019	694852	Kit-Label
1022	★∅691890	Gasket-Rocker Cover
1023	791585	Cover-Rocker Arm
1026	790287	Rod-Push
1029	797443	Arm-Rocker (Metric) (Used After Code Date 09061700).
		------- Note -----
		691230 Arm-Rocker (SAE) (Used Before Code Date 09061800).
1034	691343	Guide-Push Rod

★ Included in Engine Gasket Set-Ref. No.358.
● Included in Carburetor Overhaul Kit-Ref. No. 121.
◆ Included in Carburetor Gasket Set-Ref. No. 977.
∅ Included in Valve Gasket Set-Ref. No 1095.

Illustrations cover a range of engines. Parts shown without corresponding text may not be used on your specific engine.

Not for Reproduction

122400

REF. NO.	PART NO.	DESCRIPTION
1036		Label-Emissions (Available From An Authorized Briggs & Stratton Sevice Dealer)
1051	**691265**	Ring-Retaining
1052	**790141**	Sensor-Oil
1054	**280275**	Cable-Tie
1058	**277040**	Operator's Manual
		------- Note -----
		276339 Operator's Manual
1070	**699201**	Screw (Flywheel Fan)
1090	**691293**	Retainer-Brush
1095	**791798**	Gasket Set-Valve
1119	**699772**	Screw (Alternator)
1127	**797146**	Screw (Float Bowl To Carburetor Body)
1130	**793438**	Stud (Intake Manifold)
1174	**692055**	Nut (Intake Manifold)
1210	**498144**	Pulley/Spring Assembly (Pulley) (Rewind Starter Parts Used With 3MM Diameter Starter Rope)
		------- Note -----
		791849 Pulley/Spring Assembly (Pulley) (Rewind Starter Parts Used With 5MM Diameter Starter Rope)
1211	**498144**	Pulley/Spring Assembly (Spring) (Rewind Starter Parts Used With 3MM Diameter Starter Rope)
		------- Note -----
		791849 Pulley/Spring Assembly (Spring) (Rewind Starter Parts Used With 5MM Diameter Starter Rope)
1244	**797143**	Seal-O Ring (Carburetor Bowl Drain)
1305	**699691**	Screw (Oil Sensor Module)
1319	**794467**	Label-Warning
1330	**272147**	Repair Manual
1345	**699887**	Filter-Filler Neck
1345A	**792917**	Filter-Filler Neck
1363	**790334**	Sprocket-Gear Reduction
1364	**790335**	Chain-Gear Reduction
1365	**790336**	Shaft-Output Gear Reduction
1367	**690936**	Screw (Gear Reduction Sprocket)
1368	**690301**	Washer (Gear Reduction Sprocket)

★ Included in Engine Gasket Set-Ref. No.358.
● Included in Carburetor Overhaul Kit-Ref. No. 121.
◆ Included in Carburetor Gasket Set-Ref. No. 977.
∅ Included in Valve Gasket Set-Ref. No 1095.

Illustrations cover a range of engines. Parts shown without corresponding text may not be used on your specific engine.

Not for Reproduction

Not for
Reproduction

Not for
Reproduction

Not for
Reproduction

Not for
Reproduction

BRIGGS & STRATTON®