GX200H(QHB1)	E-11 RECOIL STARTER

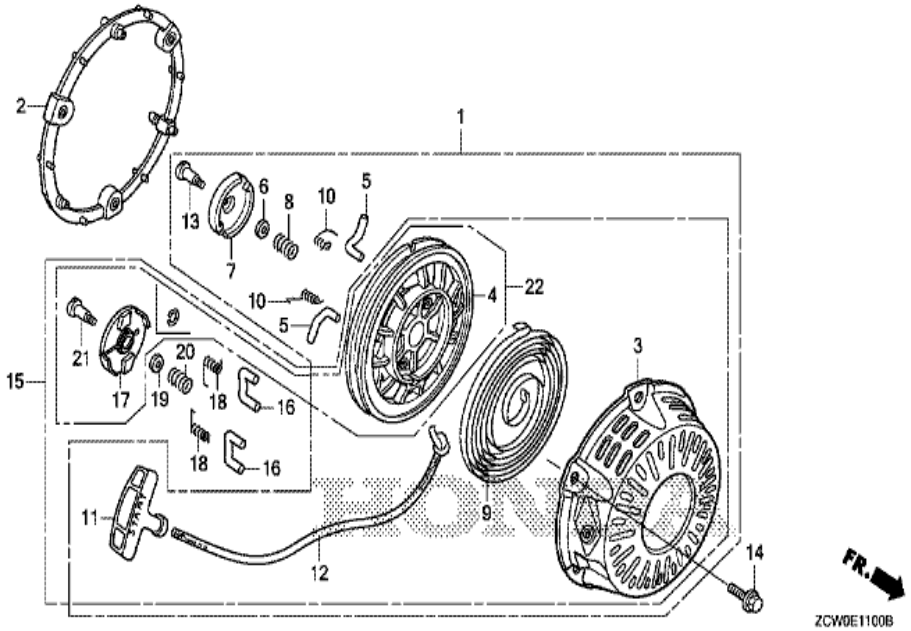

Ref	Partnumber	Description	GX200H	Serial Numbers	
001	28400-Z0T-003ZB	STARTER ASSY., RECOIL *R280*	1		1014371
001	28400-Z0T-003ZB	STARTER ASSY., RECOIL *R280*	1		1014371
002	28405-ZCW-000ZA	SPACER, RECOIL STARTER MOUNTING *	1		
002	28405-ZCW-000ZB	SPACER, RECOIL STARTER MOUNTING *	1		
003	28410-Z1T-701ZB	CASE COMP., RECOIL STARTER *R280*	1	1014372	
003	28410-Z1T-701ZB	CASE COMP., RECOIL STARTER *R280*	1	1014372	
003	28410-Z1T-701ZD	CASE COMP., RECOIL STARTER *NH1*	1	1014372	
003	28410-Z1T-701ZD	CASE COMP., RECOIL STARTER *NH1*	1	1014372	
003	28410-ZH8-003YA	CASE COMP., RECOIL STARTER *R280 *	1		
003	28410-ZH8-003YA	CASE COMP., RECOIL STARTER *R280 *	1		1014371
003	28410-ZH8-003YA	CASE COMP., RECOIL STARTER *R280 *	1		1014371
004	28421-Z0T-003	REEL, RECOIL STARTER (BLACK)	1		1014371
004	28421-Z0T-003	REEL, RECOIL STARTER (BLACK)	1		1014371
Ref	Partnumber	Description	GX200H	Serial Numbers	
004	28421-Z1T-702	REEL, RECOIL STARTER (BLACK)	1		
004	28421-Z1T-702	REEL, RECOIL STARTER (BLACK)	1	1051332	

005	28422-ZH8-801	RATCHET, STARTER	2		1014371
005	28422-ZH8-801	RATCHET, STARTER	2		1014371
006	28431-ZH8-801	PLATE, FRICTION	1		1014371
006	28431-ZH8-801	PLATE, FRICTION	1		1014371
007	28433-ZH8-801	GUIDE, RATCHET	1		1014371
007	28433-ZH8-801	GUIDE, RATCHET	1		1014371
008	28441-ZH8-801	SPRING, FRICTION	1		1014371
008	28441-ZH8-801	SPRING, FRICTION	1		1014371
009	28442-ZH8-003	SPRING, RECOIL STARTER	1		
010	28443-ZH8-801	SPRING, RETURN	2		1014371
010	28443-ZH8-801	SPRING, RETURN	2		1014371
011	28461-ZH8-013	KNOB, RECOIL STARTER	1		
012	28462-Z1T-701	ROPE, RECOIL STARTER	1	1014372	
012	28462-Z1T-701	ROPE, RECOIL STARTER	1	1014372	
012	28462-ZH8-003	ROPE, RECOIL STARTER	1		
012	28462-ZH8-003	ROPE, RECOIL STARTER	1		1014371
012	28462-ZH8-003	ROPE, RECOIL STARTER	1		1014371
013	90003-ZH8-801	SCREW, SETTING	1		1014371
013	90003-ZH8-801	SCREW, SETTING	1		1014371
014	95701-0601800	BOLT, FLANGE, 6X18	3		
015	28400-Z1T-701ZB	STARTER ASSY., RECOIL *R280*	1	1014372	1051331
015	28400-Z1T-701ZB	STARTER ASSY., RECOIL *R280*	1	1014372	1051331
015	28400-Z1T-701ZD	STARTER ASSY., RECOIL *NH1*	1	1014372	1051331
015	28400-Z1T-701ZD	STARTER ASSY., RECOIL *NH1*	1	1014372	1051331
015	28400-Z1T-702ZB	STARTER ASSY., RECOIL *R280*	1	1051332	
015	28400-Z1T-702ZD	STARTER ASSY., RECOIL *NH1*	1		
015	28400-Z1T-702ZD	STARTER ASSY., RECOIL *NH1*	1	1051332	
016	28422-Z1T-701	RATCHET, STARTER	2	1014372	
016	28422-Z1T-701	RATCHET, STARTER	2	1014372	
017	28433-Z1T-702	GUIDE, RATCHET	1	1051332	
018	28443-Z1T-701	SPRING, RETURN	2	1014372	
Ref	Partnumber	Description	GX200H	Serial Numbers	
018	28443-Z1T-701	SPRING, RETURN	2	1014372	
019	28431-ZH8-801	PLATE, FRICTION	1	1051332	
020	28441-ZH8-801	SPRING, FRICTION	1	1051332	
021	90003-ZH8-801	SCREW, SETTING	1	1051332	
022	06280-Z1T-305	STARTER SET, RECOIL	1	1014372	1051331
022	06280-Z1T-305	STARTER SET, RECOIL	1	1014372	1051331

GX200H(QHB1)	E-12 FAN COVER

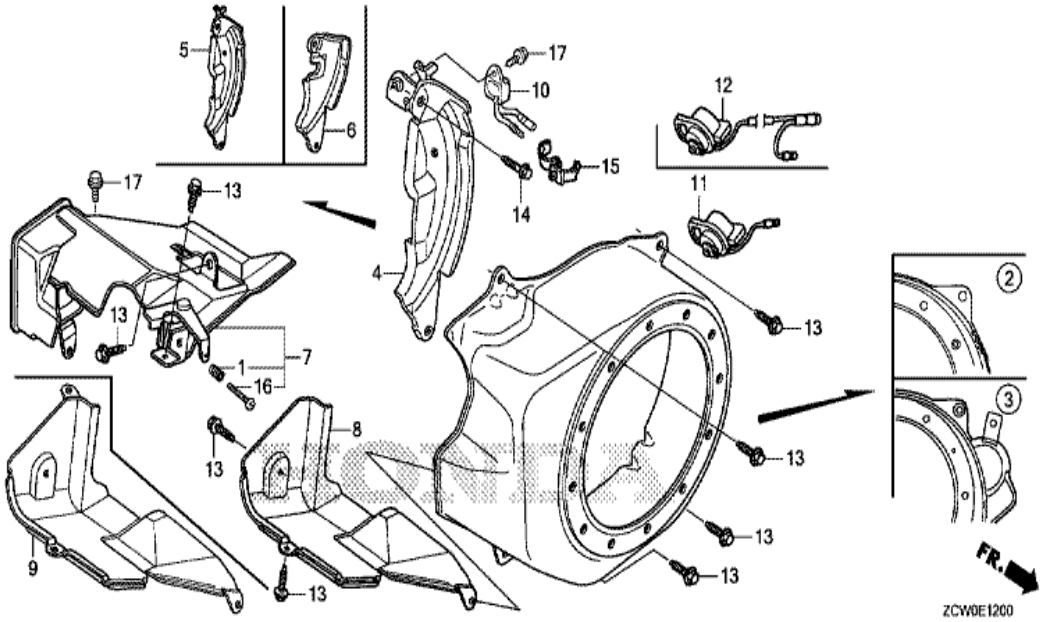

Ref	Partnumber	Description	GX200H	Serial Numbers
002	19610-ZCW-800ZA	COVER COMP., FAN *R280*	1	
002	19610-ZCW-800ZA	COVER COMP., FAN *R280*	1	
002	19610-ZCW-800ZB	COVER COMP., FAN *NH1*	1	
005	19612-ZH8-000	PLATE, SIDE (STD.)	1	
008	19631-Z1T-000	SHROUD	1	
013	90013-883-000	BOLT, FLANGE, 6X12 (CT200)	6	
014	90022-888-010	BOLT, FLANGE, 6X20 (CT200)	1	

GX200H(QHB1)	E-14 CARBURETOR (1)

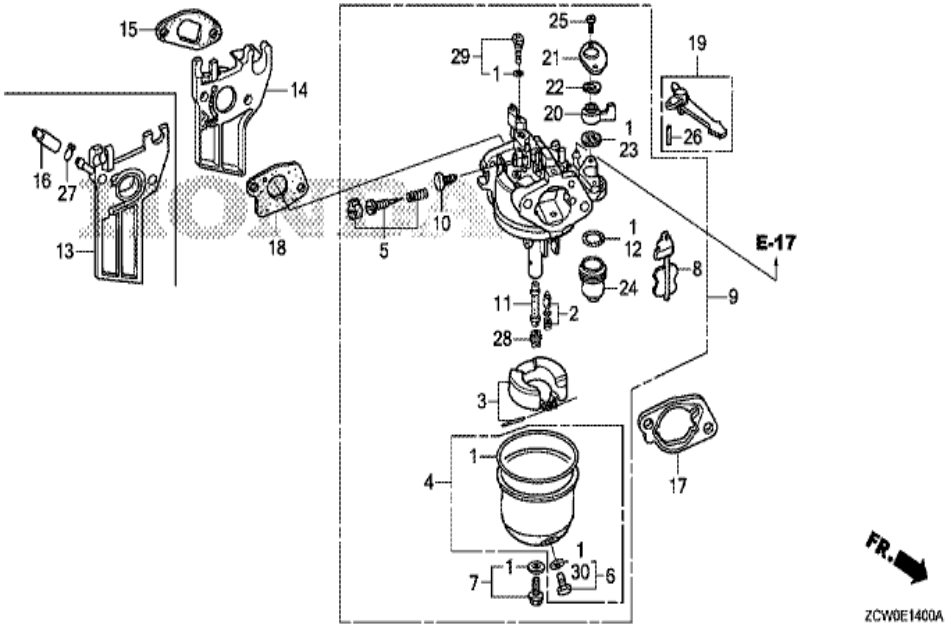

Ref	Partnumber	Description	GX200H	Serial Numbers
001	16010-ZE1-812	GASKET SET	1	
002	16011-ZE0-005	VALVE SET, FLOAT	1	
003	16013-Z0S-B01	FLOAT SET	1	
004	16015-ZE0-831	CHAMBER SET, FLOAT	1	
005	16016-ZH7-W01	SCREW SET, PILOT	1	
006	16024-ZE1-811	SCREW SET, DRAIN	1	
007	16028-ZE0-005	SCREW SET	1	
008	16044-ZE0-005	CHOKE SET	1	
009	16100-ZCW-V11	CARBURETOR ASSY. (BE59Y A)	1	
010	16124-ZE0-005	SCREW, THROTTLE STOP	1	
011	16166-ZL0-000	NOZZLE, MAIN	1	
012	16173-001-004	PACKING, FUEL STRAINER CUP	1	
014	16211-ZCW-000	INSULATOR, CARBURETOR	1	
Ref	Partnumber	Description	GX200H	Serial Numbers
015	16212-Z1T-701	PACKING, INSULATOR (NINGBO SIL GASKET)	1	
015	16212-ZH8-800	PACKING, INSULATOR	1	

017	16220-ZE1-020	SPACER COMP., CARBURETOR	1
018	16221-Z1T-701	PACKING, CARBURETOR (NINGBO SIL GASKET)	1
018	16221-ZH8-801	PACKING, CARBURETOR	1
019	16610-Z1T-000	LEVER COMP., CHOKE (STD.)	1
020	16953-ZE1-812	LEVER, COCK	1
021	16954-ZE1-812	PLATE, LEVER SETTING	1
022	16956-ZE1-811	SPRING, COCK LEVER	1
023	16957-ZE1-812	PACKING, FUEL COCK	1
024	16967-ZE0-811	CUP, FUEL STRAINER	1
025	93500-030061H	SCREW, PAN, 3X6	2
026	94305-20122	PIN, SPRING, 2X12	1
028	99101-ZH80700	JET, MAIN, #70	(1)
028	99101-ZH80720	JET, MAIN, #72	(1)
028	99101-ZH80750	JET, MAIN, #75	1
029	99204-ZA00450	JET SET, PILOT, #45	1
030	16141-Z0S-003	WASHER, PLAIN (6.2X10.7 DRAIN)	1

GX200H(QHB1)	E-15-2 AIR CLEANER (OIL BATH)

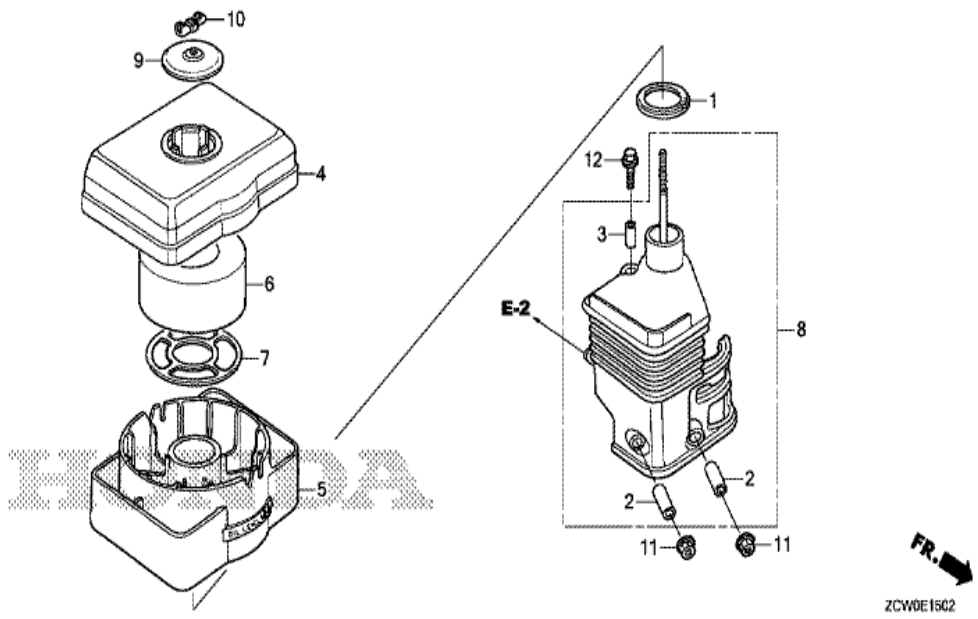

Ref	Partnumber	Description	GX200H	Serial Numbers
001	16271-ZE1-000	PACKING, ELBOW	1	
002	17238-ZE7-010	COLLAR, AIR CLEANER	2	
003	17239-ZE1-000	COLLAR B, AIR CLEANER	1	
004	17401-ZE1-810	BODY, CLEANER (OIL BATH)	1	
005	17402-ZE1-810	PAN, CLEANER OIL (OIL BATH)	1	
006	17403-ZE1-810	ELEMENT, AIR CLEANER (OIL BATH)	1	
007	17404-841-000	GRID, AIR CLEANER	1	
008	17410-ZE1-020	ELBOW COMP., AIR CLEANER	1	
009	17421-ZE1-000	CAP, CLEANER	1	
010	90325-044-000	NUT, TOOL BOX SETTING	1	
011	94050-06000	NUT, FLANGE, 6MM	2	
012	95701-0602000	BOLT, FLANGE, 6X20	1	

GX200H(QHB1)	E-16 MUFFLER

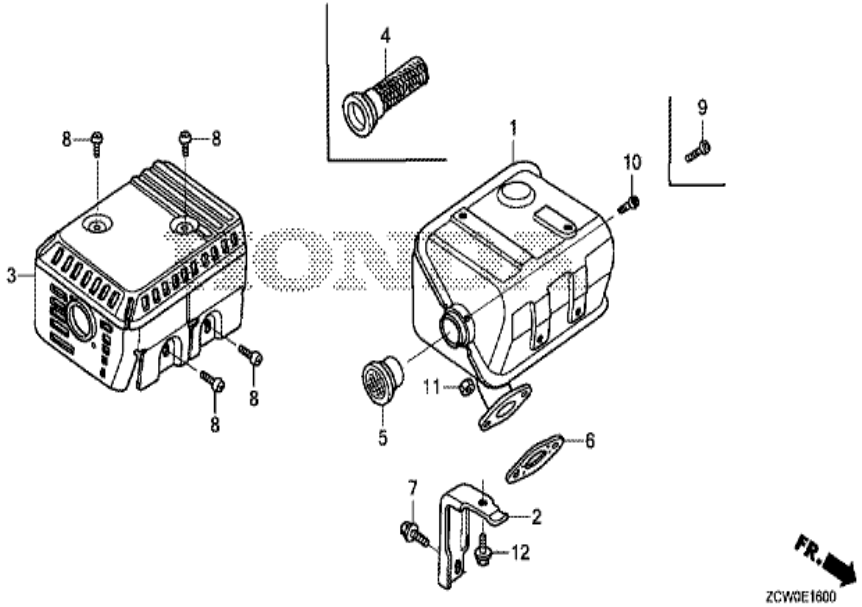

Ref	Partnumber	Description	GX200H	Serial Numbers
001	18310-ZCW-000	MUFFLER COMP.	1	
002	18315-ZE1-000	STAY, MUFFLER	1	
003	18320-Z1T-601	PROTECTOR, MUFFLER (SILENT)	1	
004	18355-ZL0-000	ARRESTER, SPARK	(1)	
005	18361-ZCW-000	NETTING, WIRE FLANGE	1	
006	18381-Z1T-003	GASKET, MUFFLER	1	
006	18381-Z1T-701	GASKET, MUFFLER (NINGBO SIL GASKET)	1	
007	90016-ZE1-000	BOLT, FLANGE, 6X13 (CT200)	1	
008	90050-ZE1-000	SCREW, TAPPING, 5X8	4	
009	90055-ZE1-000	SCREW, TAPPING, 4X6	(1)	
010	90056-ZL0-000	SCREW, TAPPING, 4X6	1	
011	94001-080000S	NUT, HEX., 8MM	2	
012	95701-0601200	BOLT, FLANGE, 6X12	1	

GX200H(QHB1)	E-17 FUEL TANK

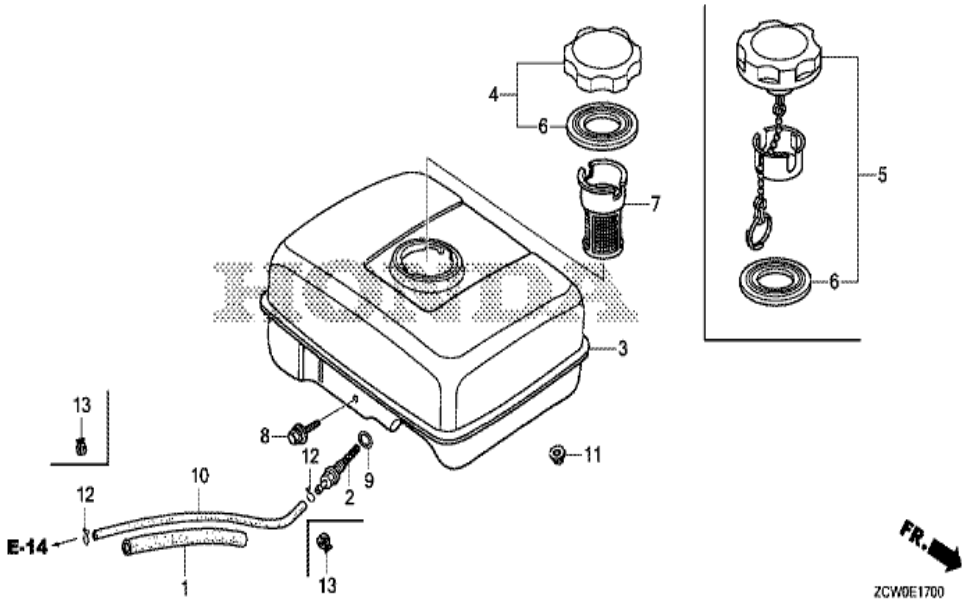

Ref	Partnumber	Description	GX200H	Serial Numbers
001	16854-ZH8-000	RUBBER, SUPPORTER (107MM)	1	
002	16955-Z1T-010	JOINT, FUEL TANK	1	
003	17510-ZE1-030ZA	TANK COMP., FUEL *NH31 *	1	
003	17510-ZE1-030ZF	TANK COMP., FUEL *NH1 *	1	
004	17620-Z1T-800	CAP COMP., FUEL FILLER (CHROME PLATED) (	1	
006	17631-Z1T-800	PACKING, FUEL FILLER CAP (39X62X3) (TOUY	1	
008	90004-ZCW-000	BOLT, FLANGE, 6X34	1	
009	91353-671-004	O-RING, 14MM (NOK)	1	
010	91424-Z4M-003	TUBE, FUEL, 4.5X145 (FKM)	1	
011	94050-06000	NUT, FLANGE, 6MM	2	
013	95002-4080008	CLAMP, TUBE (D8)	2	

GX200H(QHB1)	E-19 FLYWHEEL

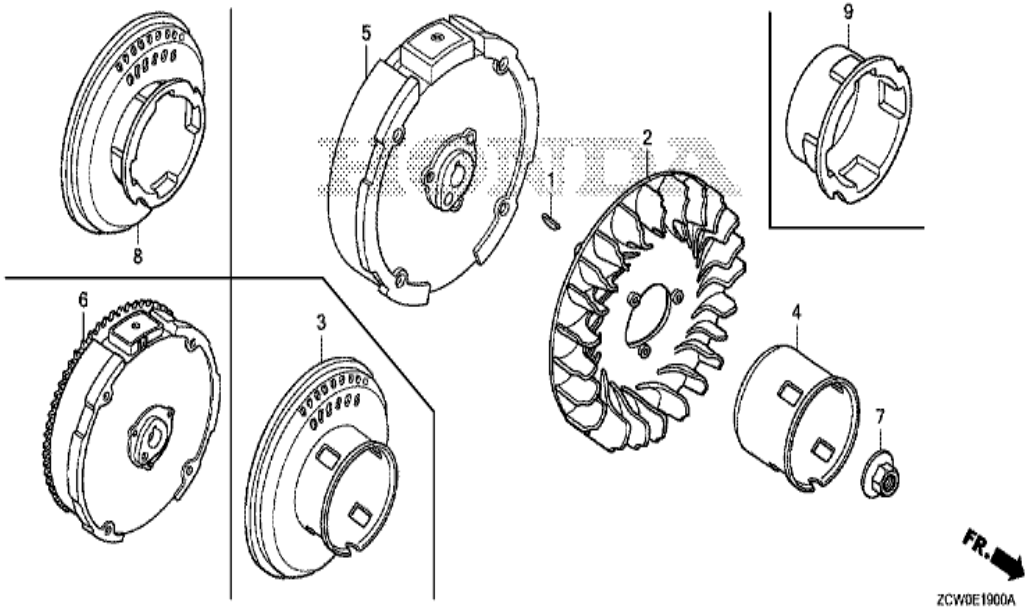

Ref	Partnumber	Description	GX200H	Serial Numbers	
001	13331-357-000	KEY, SPECIAL WOODRUFF, 25X18	1		
002	19511-Z1T-000	FAN, COOLING	1		
003	28450-ZCW-800	PULLEY COMP., STARTER	1		1012984
005	31110-Z1V-003	FLYWHEEL COMP.	1		
007	90201-Z1T-000	NUT, SPECIAL, 14MM	1		
008	28450-ZCW-700	PULLEY COMP., STARTER	1		
008	28450-ZCW-700	PULLEY COMP., STARTER	1	1012985	

GX200H(QHB1)	E-2 CYLINDER HEAD

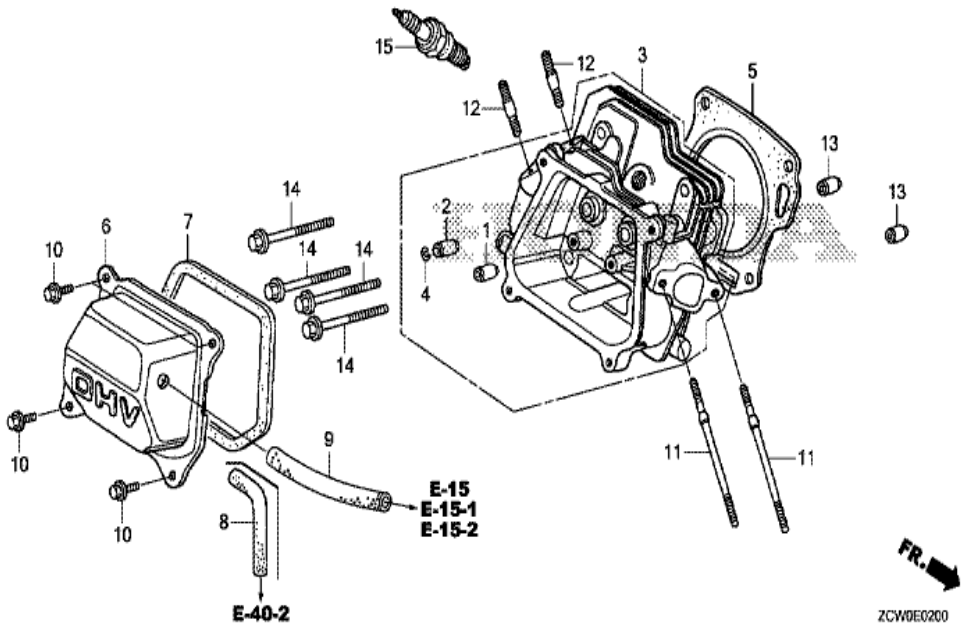

Ref	Partnumber	Description	GX200H	Serial Numbers
001	12204-Z1T-305	GUIDE, IN. VALVE (O.S.)	1	
002	12205-Z1T-305	GUIDE, EX. VALVE (O.S.)	1	
003	12210-ZCW-405	HEAD COMP., CYLINDER	1	
004	12216-ZE5-300	CLIP, VALVE GUIDE	1	
005	12251-ZCW-701	GASKET, CYLINDER HEAD (NINGBO SIL GASKET	1	
005	12251-ZL0-003	GASKET, CYLINDER HEAD (NIPPON LEAKLESS)	1	
006	12310-ZE1-020	COVER COMP., HEAD	1	
007	12312-Z1T-701	PACKING, HEAD COVER (NINGBO SIL GASKET)	1	
007	12391-ZE1-000	PACKING, HEAD COVER	1	
009	15721-ZH8-000	TUBE, BREATHER	1	
010	90013-883-000	BOLT, FLANGE, 6X12 (CT200)	4	
011	90043-ZE1-020	BOLT, STUD, 6X112	2	
012	90047-ZE1-000	BOLT, STUD, 8X32	2	
Ref	Partnumber	Description	GX200H	Serial Numbers
013	94301-10160	DOWEL PIN, 10X16	2	
014	95701-0806000	BOLT, FLANGE, 8X60	4	

015	98079-55855	PLUG, SPARK (W16EPR-U) (DENSO)	(1)
015	98079-55876	PLUG, SPARK (BPR5ES) (NGK)	(1)
015	98079-56846	PLUG, SPARK (BPR6ES) (NGK)	1
015	98079-56855	PLUG, SPARK (W20EPR-U) (DENSO)	1

GX200H(QHB1)	E-20 IGNITION COIL

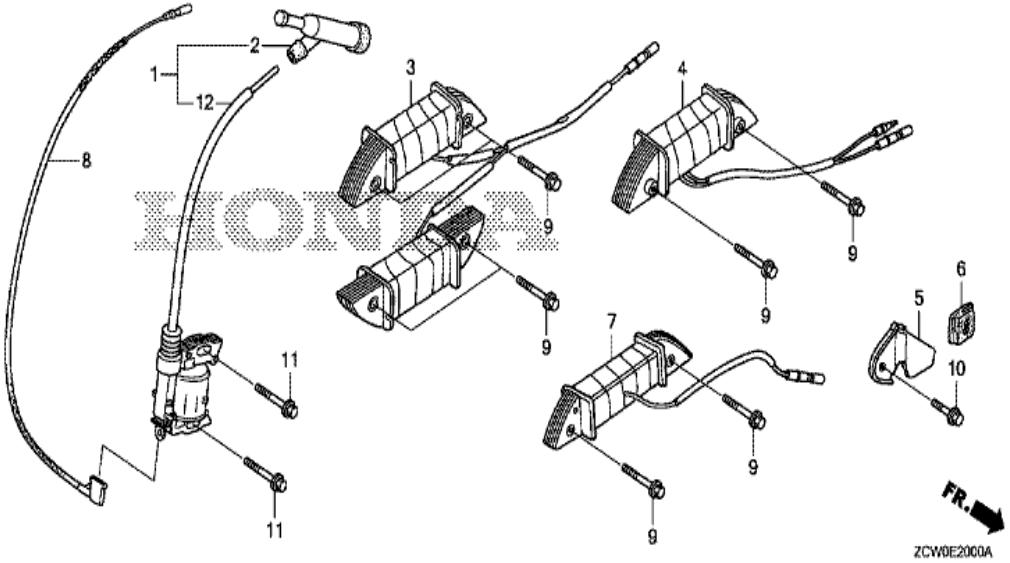

Ref	Partnumber	Description	GX200H	Serial Numbers
001	30500-Z1T-023	COIL ASSY., IGNITION	1	
002	30700-Z1T-003	CAP ASSY., NOISE SUPPRESSOR	1	
008	36101-ZE1-010	CORD, STOP SWITCH (370MM)	1	
011	90121-952-000	BOLT, FLANGE, 6X25 (CT200)	2	

GX200H(QHB1)	E-22 CONTROL

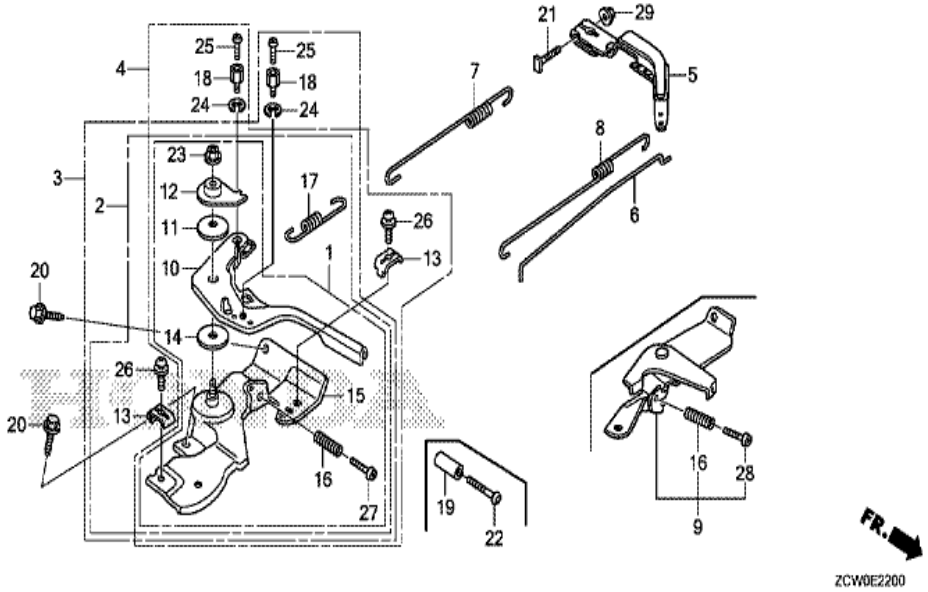

Ref	Partnumber	Description	GX200H	Serial Numbers
004	16500-Z1T-630	CONTROL ASSY. (REMOTE INTL-S)	1	
005	16551-ZL0-000	ARM, GOVERNOR	1	
006	16555-ZE1-000	ROD, GOVERNOR	1	
007	16561-ZL0-000	SPRING, GOVERNOR	1	
008	16562-ZE1-020	SPRING, THROTTLE RETURN	1	
010	16571-Z1T-000	LEVER, CONTROL	1	
011	16574-ZE1-000	SPRING, LEVER	1	
012	16575-ZH8-000	WASHER, CONTROL LEVER	1	
013	16576-891-000	HOLDER, CABLE	1	
014	16578-ZE1-000	SPACER, CONTROL LEVER	1	
015	16580-ZH8-813	BASE COMP., CONTROL (REMOTE)	1	
016	16584-883-300	SPRING, CONTROL ADJUSTING	1	
017	16592-ZE1-810	SPRING, CABLE RETURN	1	
Ref	Partnumber	Description	GX200H	Serial Numbers
018	16594-883-010	HOLDER, WIRE	1	
019	16599-ZG1-M10	COLLAR, STOPPER	(1)	

020	90013-883-000	BOLT, FLANGE, 6X12 (CT200)	2
021	90015-ZE5-010	BOLT, GOVERNOR ARM	1
022	90016-ZG9-N30	SCREW, RECESSED, 5X25	(1)
023	90114-SA0-000	NUT, SELF-LOCK, 6MM	1
023	90202-Z1T-000	NUT, SELF-LOCK, 6MM	1
024	90605-Z1T-000	CIRCLIP, 5MM	1
025	93500-040060H	SCREW, PAN, 4X6	1
026	93500-050160A	SCREW, PAN, 5X16	1
027	93500-050250H	SCREW, PAN, 5X25	1
029	94050-06000	NUT, FLANGE, 6MM	1

GX200H(QHB1)	E-28 LABEL

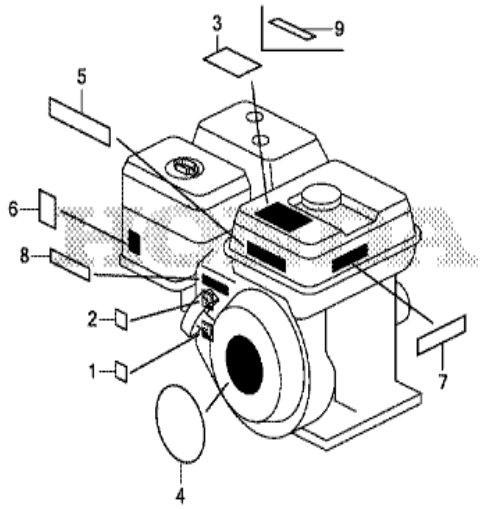

ZCW0E2800A

Ref	Partnumber	Description	GX200H	Serial Numbers
002	87114-ZH7-840	LABEL, WARNING (NOT CERTIFIED FOR SALE)	1	
003	87519-Z4N-000	MARK, OPERATOR CAUTION (PICTOGRAPH)	1	
004	87521-ZL0-030	EMBLEM (GX200)	1	
006	87528-ZH7-000	MARK, CHOKE (GRAY)	1	
008	87532-ZH8-W40	MARK, THROTTLE INDICATION	1	

GX200H(QHB1)	E-3 CYLINDER BARREL

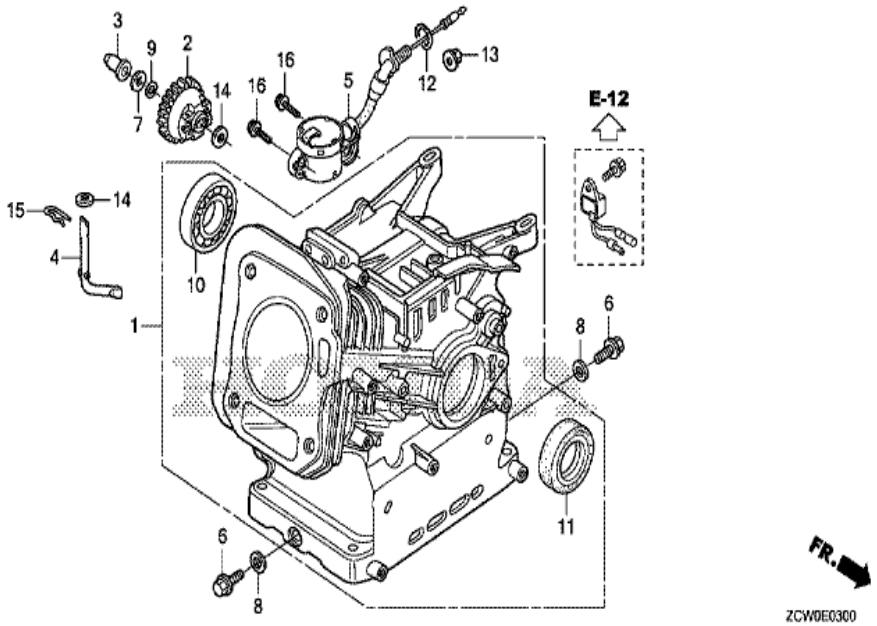

Ref	Partnumber	Description	GX200H	Serial Numbers
001	12000-ZCW-405	BARREL ASSY., CYLINDER	1	
002	16506-ZL0-000	GOVERNOR ASSY.	1	
003	16531-Z1T-000	SLIDER, GOVERNOR	1	
004	16541-Z1T-000	SHAFT, GOVERNOR ARM	1	
006	90131-ZE1-000	BOLT, DRAIN PLUG	2	
007	90451-Z1T-000	WASHER, THRUST, 6MM	1	
008	90601-ZE1-000	WASHER, DRAIN PLUG, 10.2MM	2	
009	90602-ZE1-000	CLIP, GOVERNOR HOLDER	1	
010	91001-Z1T-003	BEARING, RADIAL BALL, 6205 (NSK)	1	
010	91001-ZF1-003	BEARING, RADIAL BALL (6205TMB) (NTN)	1	
010	91001-ZF1-004	BEARING, RADIAL BALL (6205SH) (KOYO)	1	
011	91202-Z1T-003	OIL SEAL, 25X41X6	1	
014	94101-06800	WASHER, PLAIN, 6MM	2	
Ref	Partnumber	Description	GX200H	Serial Numbers
015	94251-08000	PIN, LOCK, 8MM	1	

GX200H(QHB1)	E-6 CRANKCASE COVER (1)

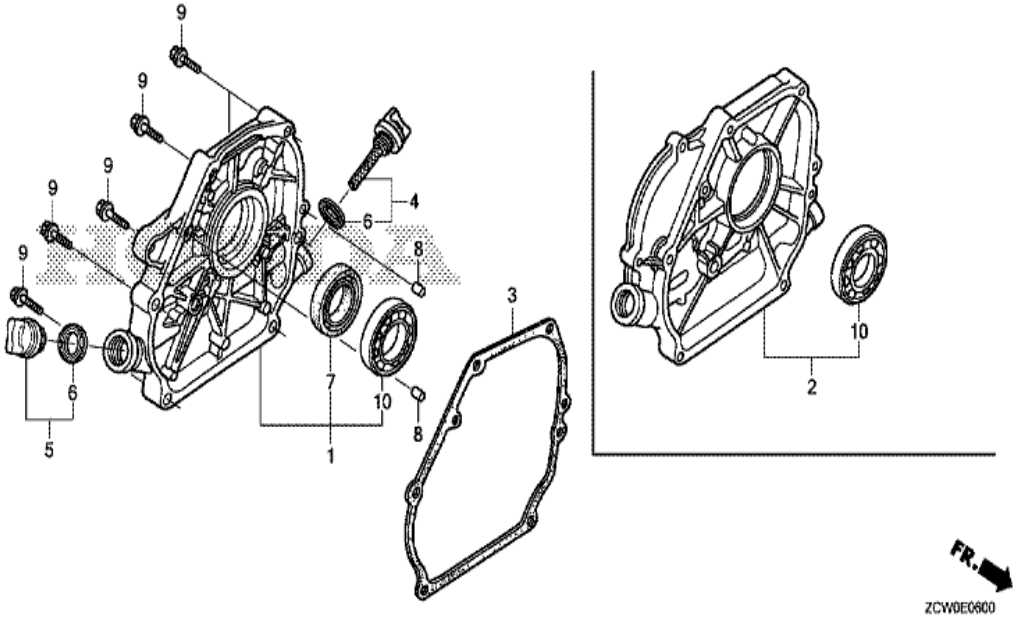

Ref	Partnumber	Description	GX200H	Serial Numbers
001	11300-Z1T-640	COVER ASSY., CRANKCASE	1	
003	11381-Z1T-701	PACKING, CASE COVER (NINGBO SIL GASKET)	1	
003	11381-ZH8-801	PACKING, CASE COVER (NON ASBESTOS)	1	
004	15600-Z1T-000	CAP ASSY., OIL FILLER	1	
005	15600-Z1T-600	CAP ASSY., OIL FILLER	1	
006	15625-Z1T-000	PACKING, OIL FILLER CAP	2	
007	91202-Z1T-003	OIL SEAL, 25X41X6	1	
008	94301-08140	DOWEL PIN, 8X14	2	
009	95701-0803200	BOLT, FLANGE, 8X32	6	
010	96100-6205000	BEARING, RADIAL BALL, 6205	1	

GX200H(QHB1)	E-7 CRANKSHAFT

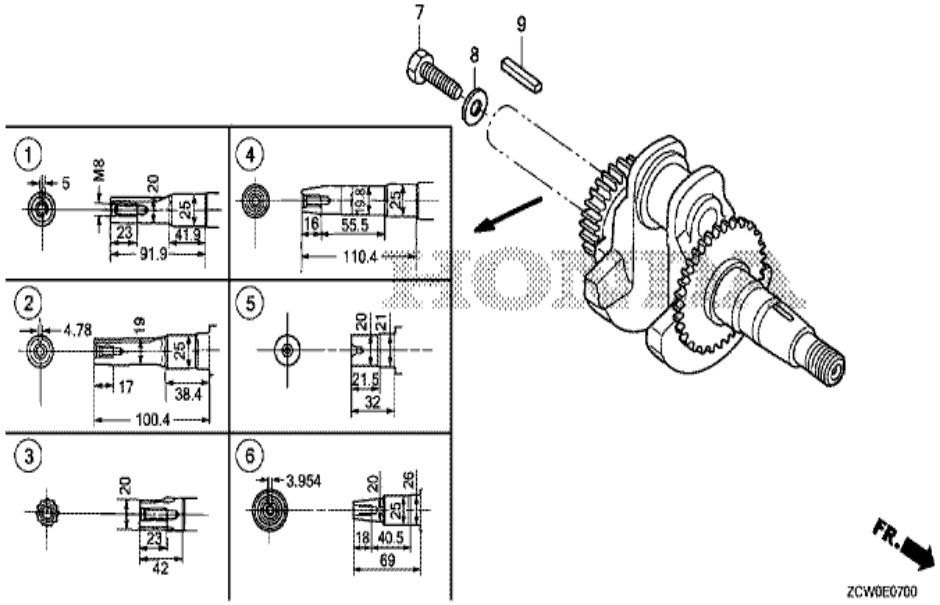

Ref	Partnumber	Description	GX200H	Serial Numbers
002	13310-ZCW-600	CRANKSHAFT COMP.	1	

GX200H(QHB1)	E-8 PISTON

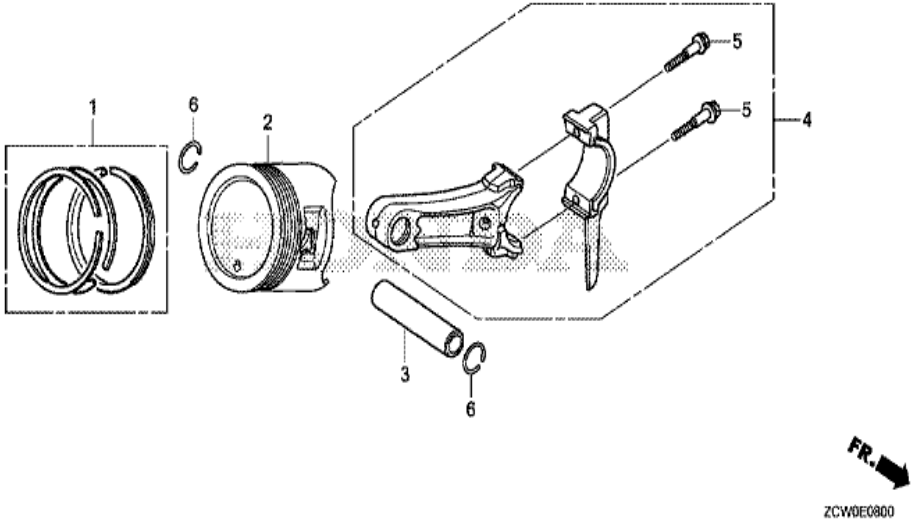

Ref	Partnumber	Description	GX200H	Serial Numbers
001	13010-Z1T-701	RING SET, PISTON (STD.) (FUJIAN DONGYA M	1	
001	13010-Z4K-004	RING SET, PISTON (STD.) (TPR)	1	
001	13010-Z4P-003	RING SET, PISTON (STD.) (RIKEN)	1	
001	13011-Z1T-701	RING SET, PISTON (0.25) (FUJIAN DONGYA M	(1)	
001	13011-Z4K-004	RING SET, PISTON (0.25) (TPR)	(1)	
001	13011-Z4P-003	RING SET, PISTON (0.25) (RIKEN)	(1)	
001	13012-Z1T-701	RING SET, PISTON (0.50) (FUJIAN DONGYA M	(1)	
001	13012-Z4K-004	RING SET, PISTON (0.50) (TPR)	(1)	
001	13012-Z4P-003	RING SET, PISTON (0.50) (RIKEN)	(1)	
001	13013-Z1T-701	RING SET, PISTON (0.75) (FUJIAN DONGYA M	(1)	
001	13013-Z4K-004	RING SET, PISTON (0.75) (TPR)	(1)	
001	13013-Z4P-003	RING SET, PISTON (0.75) (RIKEN)	(1)	
002	13101-ZCW-000	PISTON (STD.)	1	
Ref	Partnumber	Description	GX200H	Serial Numbers
002	13102-ZCW-000	PISTON (0.25)	(1)	
002	13103-ZCW-000	PISTON (0.50)	(1)	

002	13104-ZCW-000	PISTON (0.75)	(1)
003	13111-Z1T-000	PIN, PISTON	1
004	13200-Z1T-600	ROD ASSY., CONNECTING (JLH)	1
005	90001-Z1T-000	BOLT, CONNECTING ROD	2
006	90551-ZE1-000	CLIP, PISTON PIN, 18MM	2

GX200H(QHB1)	E-9 CAMSHAFT

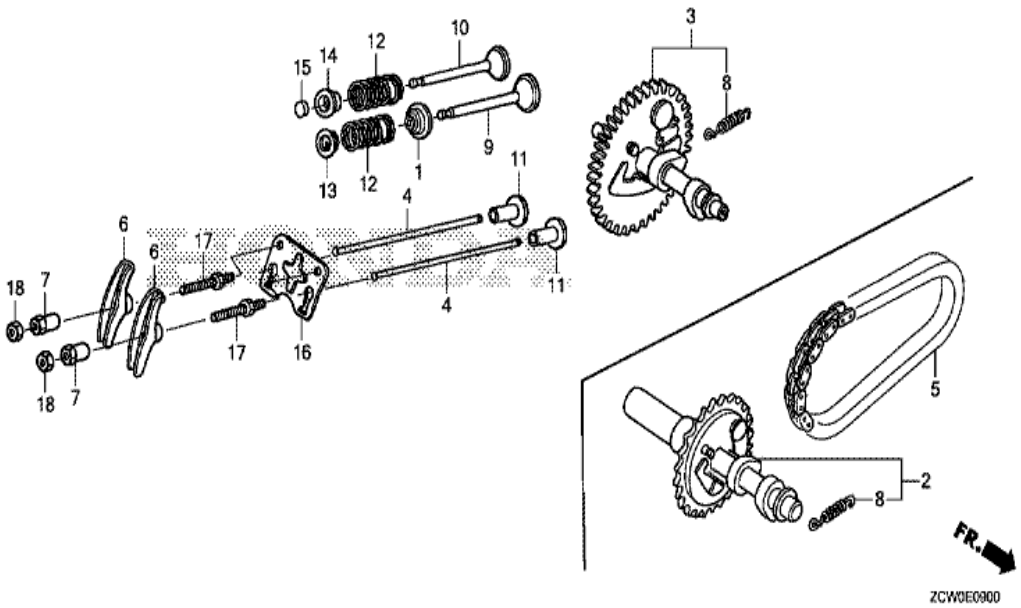

Ref	Partnumber	Description	GX200H	Serial Numbers
001	12209-ZH8-003	SEAL, VALVE STEM	1	
003	14100-ZL0-000	CAMSHAFT ASSY.	1	
004	14410-ZE1-010	ROD, PUSH	2	
006	14431-ZE1-000	ARM, VALVE ROCKER	2	
007	14451-Z7E-000	PIVOT, ROCKER ARM	2	
008	14568-ZE1-000	SPRING, WEIGHT RETURN	1	
009	14711-ZF1-000	VALVE, IN.	1	
010	14721-ZF1-000	VALVE, EX.	1	
011	14731-ZL0-000	LIFTER, VALVE	2	
012	14751-ZF1-000	SPRING, VALVE	2	
013	14771-ZE1-000	RETAINER, IN. VALVE SPRING	1	
014	14773-ZE1-000	RETAINER, EX. VALVE SPRING	1	
015	14781-ZE1-000	ROTATOR, VALVE	1	
Ref	Partnumber	Description	GX200H	Serial Numbers
016	14791-ZE1-010	PLATE, PUSH ROD GUIDE	1	
017	90012-ZE0-010	BOLT, PIVOT, 8MM	2	

018	90206-ZE1-000	NUT, PIVOT ADJUSTING	2

GX200H(QHB1)	EOP-1 GASKET KIT

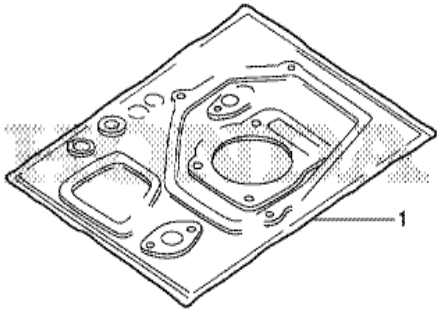

ZCW0X0100

Ref	Partnumber	Description	GX200H	Serial Numbers
001	06111-ZCW-000	GASKET KIT	1	
001	06111-ZCW-700	GASKET KIT	1	

GX200H(QHB1)	EOP-2 MUFFLER COVER

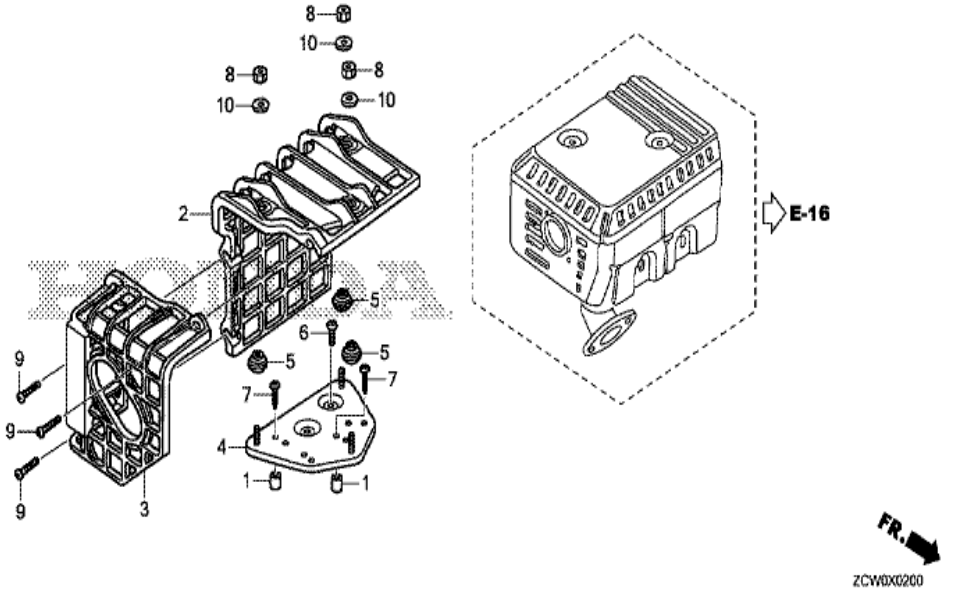

Ref	Partnumber	Description	GX200H	Serial Numbers
001	17233-896-701	COLLAR, AIR CLEANER CASE	(2)	
002	18433-ZH8-W40	COVER COMP., MUFFLER	(1)	
003	18434-ZH8-W40	COVER COMP., RR. MUFFLER	(1)	
004	18436-ZH8-W41	BASE COMP., MUFFLER COVER	(1)	
005	18466-ZH8-W40	SPACER, MUFFLER COVER	(3)	
006	90050-ZE1-000	SCREW, TAPPING, 5X8	(1)	
007	90050-ZH8-W40	SCREW, TAPPING, 5X25	(2)	
008	90302-KF9-900	NUT, HEX., 5MM	(3)	
009	93891-0602007	SCREW-WASHER, 6X20	(3)	
010	94103-05700	WASHER, PLAIN, 5MM	(3)	